Product data sheet

Specifications



Emergency stop push button, Harmony XB4, metal, red mushroom, 40mm, 22mm, trigger latching turn to release, 2NC

XB4BS8444

Main

Range of product	Harmony XB4
Product or component type	Emergency stop push-button Emergency switching off push-button
Device short name	XB4
Bezel material	Chromium plated metal
Fixing collar material	Zamak
Mounting diameter	22.5 mm
Sale per indivisible quantity	1
Shape of signaling unit head	Round
Type of operator	trigger action and mechanical latching
Head type	Standard
Reset	Turn to release
Operator profile	Red mushroom Ø 40 mm, unmarked
Contact operation	Slow-break
Connections - terminals	Screw clamp terminals, <= 2 x 1.5 mm² with cable end conforming to IEC 60947-1 Screw clamp terminals, >= 1 x 0.22 mm² without cable end conforming to IEC 60947-1

Complementary

Height	47 mm
Width	40 mm
Depth	82 mm
Terminals description ISO n°1	(21-22)NC
Product weight	0.13 kg
Resistance to high pressure washer	7000000 Pa at 55 °C, distance : 0.1 m
Contacts type and composition	2 NC
Contacts usage	Standard contacts
Positive opening	With conforming to IEC 60947-5-1 appendix K
Operating travel	1.5 mm (NC changing electrical state) 4.3 mm (total travel)
Mechanical durability	300000 cycles
Tightening torque	0.8…1.2 N.m conforming to IEC 60947-1

Disclaimer: This documentation is not intended as a substitute for and is not to be used for determining suitability or reliability of these products for specific user applications

Downloaded from Arrow.com.

Shape of screw head	Cross compatible with Philips no 1 screwdriver Cross compatible with pozidriv No 1 screwdriver Slotted compatible with flat Ø 4 mm screwdriver Slotted compatible with flat Ø 5.5 mm screwdriver
Contacts material	Silver alloy (Ag/Ni)
Short-circuit protection	10 A cartridge fuse type gG conforming to IEC 60947-5-1
[Ith] conventional free air thermal current	10 A conforming to IEC 60947-5-1
[Ui] rated insulation voltage	600 V (pollution degree 3) conforming to IEC 60947-1
[Uimp] rated impulse withstand voltage	6 kV conforming to IEC 60947-1
[Ie] rated operational current	3 A at 240 V, AC-15, A600 conforming to IEC 60947-5-1 6 A at 120 V, AC-15, A600 conforming to IEC 60947-5-1 0.1 A at 600 V, DC-13, Q600 conforming to IEC 60947-5-1 0.27 A at 250 V, DC-13, Q600 conforming to IEC 60947-5-1 0.55 A at 125 V, DC-13, Q600 conforming to IEC 60947-5-1 1.2 A at 600 V, AC-15, A600 conforming to IEC 60947-5-1
Electrical durability	1000000 cycles, AC-15, 2 A at 230 V, operating rate <3600 cyc/h, load factor: 0.5 conforming to IEC 60947-5-1 appendix C 1000000 cycles, AC-15, 3 A at 120 V, operating rate <3600 cyc/h, load factor: 0.5 conforming to IEC 60947-5-1 appendix C 1000000 cycles, AC-15, 4 A at 24 V, operating rate <3600 cyc/h, load factor: 0.5 conforming to IEC 60947-5-1 appendix C 1000000 cycles, DC-13, 0.2 A at 110 V, operating rate <3600 cyc/h, load factor: 0.5 conforming to IEC 60947-5-1 appendix C 1000000 cycles, DC-13, 0.5 A at 24 V, operating rate <3600 cyc/h, load factor: 0.5 conforming to IEC 60947-5-1 appendix C
Electrical reliability	Λ < 10exp(-6) at 5 V and 1 mA in clean environment conforming to IEC 60947-5-4 Λ < 10exp(-8) at 17 V and 5 mA in clean environment conforming to IEC 60947-5-4
Device presentation	Complete product

Environment

Protective treatment	TH
Ambient air temperature for storage	-40…70 °C
Ambient air temperature for operation	-40…70 °C
Electrical shock protection class	Class I conforming to IEC 60536
IP degree of protection	IP66 conforming to IEC 60529 IP67 IP69 IP69K
Enclosure Type	UL type 4X/13
IK degree of protection	IK06 conforming to IEC 50102
Standards	JIS C8201-5-1 IEC 60364-5-53 UL 508 IEC 60947-5-1 CSA C22.2 No 14 ISO 13850 IEC 60947-5-5 IEC 60947-1 IEC 60204-1 IEC 60947-5-4 JIS C8201-1
Product certifications	CSA LROS (Lloyds register of shipping) BV UL listed DNV
Vibration resistance	5 gn (f= 2…500 Hz) conforming to IEC 60068-2-6

Downloaded from Arrow.com.

Shock resistance	30 gn (duration = 18 ms) for half sine wave acceleration conforming to IEC 60068-2-27 50 gn (duration = 11 ms) for half sine wave acceleration conforming to IEC 60068-2-27

Packing Units

Unit Type of Package 1	PCE
Number of Units in Package 1	1
Package 1 Height	4.700 cm
Package 1 Width	5.500 cm
Package 1 Length	9.400 cm
Package 1 Weight	131.000 g
Unit Type of Package 2	S03
Number of Units in Package 2	80
Package 2 Height	30.000 cm
Package 2 Width	30.000 cm
Package 2 Length	40.000 cm
Package 2 Weight	11.023 kg
Unit Type of Package 3	P06
Number of Units in Package 3	640
Package 3 Height	75.000 cm
Package 3 Width	60.000 cm
Package 3 Length	80.000 cm
Package 3 Weight	99.964 kg

Contractual warranty

Warranty (in months)	18

Downloaded from Arrow.com.

Environmental Data

Schneider Electric aims to achieve Net Zero status by 2050 through supply chain partnerships, lower impact materials, and circularity via our ongoing “Use Better, Use Longer, Use Again” campaign to extend product lifetimes and recyclability.

Environmental Data explained >

How we assess product sustainability >

Environmental footprint

Total lifecycle Carbon footprint	**1 kg CO2 eq.**
Carbon footprint of the manufacturing phase [A1 to A3]	**1 kg CO2 eq.**
Carbon footprint of the distribution phase [A4]	**0 kg CO2 eq.**
Carbon footprint of the installation phase [A5]	**0 kg CO2 eq.**
Carbon footprint of the use phase [B2, B3, B4, B6]	**0 kg CO2 eq.**
Carbon footprint of the end-of-life phase [C1 to C4]	**0 kg CO2 eq.**
Environmental Disclosure	Product Environmental Profile

Use Better

Materials and Substances

Average percentage of recycled plastic content	**16 %**
Average percentage of recycled metal content	**20 %**
Packaging made with recycled cardboard	**No**
Packaging without single use plastic	**No**
EU RoHS Directive	Compliant
REACh Regulation	Free of Substances of Very High Concern above the threshold
California proposition 65	**WARNING: This product can expose you to chemicals including: Di-isodecyl phthalate (DIDP), which is known to the State of California to cause birth defects or other reproductive harm. For more information go to www.P65Warnings.ca.gov**

Use Longer

Lifetime extension

Repair	**No**
Product repair index	**A**

Use Again

Repack and remanufacture

Recyclability potential, in %	**59**
End of life manual availability	End of Life Information
Take-back	**No**

Downloaded from Arrow.com.

WEEE Label	The product must be disposed on European Union markets following specific waste collection and never end up in rubbish bins

Downloaded from Arrow.com.

Dimensions Drawings

Dimensions

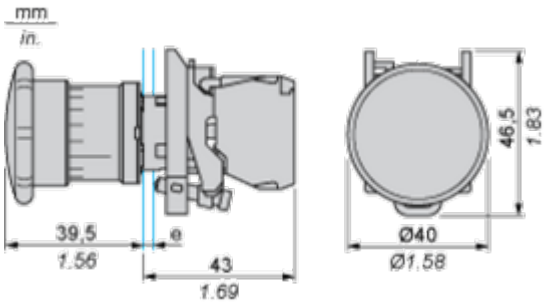

e : clamping thickness: 1 to 6 mm / 0.04 to 0.24 in.

Downloaded from Arrow.com.

Mounting and Clearance

Panel Cut-out for Pushbuttons, Switches and Pilot Lights (Finished Holes, Ready for Installation)

Connection by Screw Clamp Terminals or Plug-in Connectors or on Printed Circuit Board	Connection by Faston Connectors
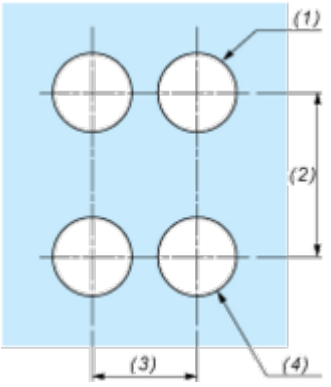	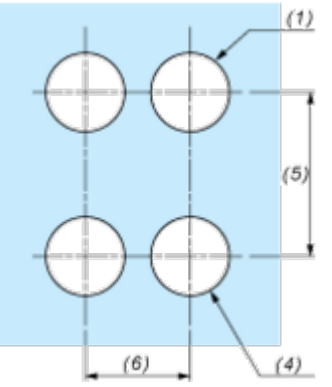
(1) Diameter on finished panel or support **(2)** 40 mm min. / 1.57 in. min. **(3)** 30 mm min. / 1.18 in. min. **(4)** Ø 22.5 mm / 0.89 in. recommended (Ø 22.3 mm $_{0}^{+0.4}$ / 0.88 in. $_{0}^{+0.016}$) **(5)** 45 mm min. / 1.78 in. min. **(6)** 32 mm min. / 1.26 in. min.	

Downloaded from Arrow.com.

Image of product / Alternate images

Alternative

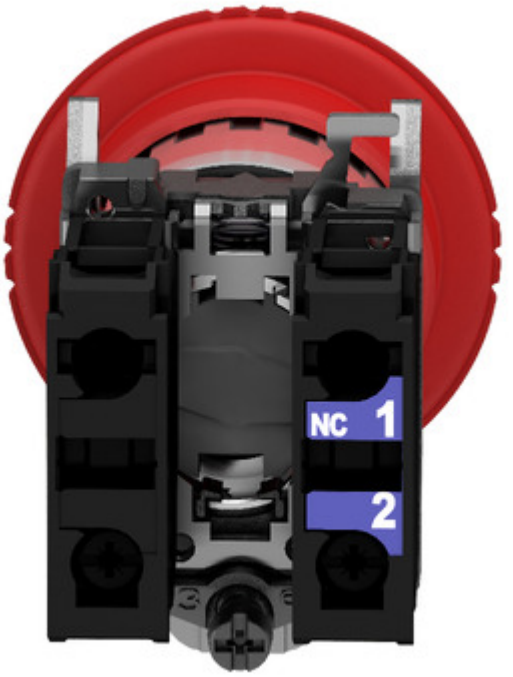

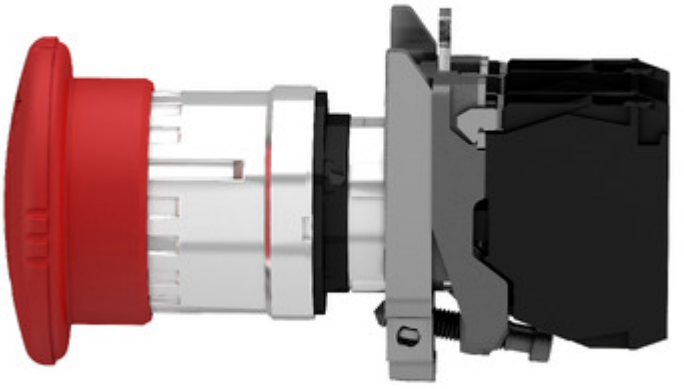

Downloaded from Arrow.com.

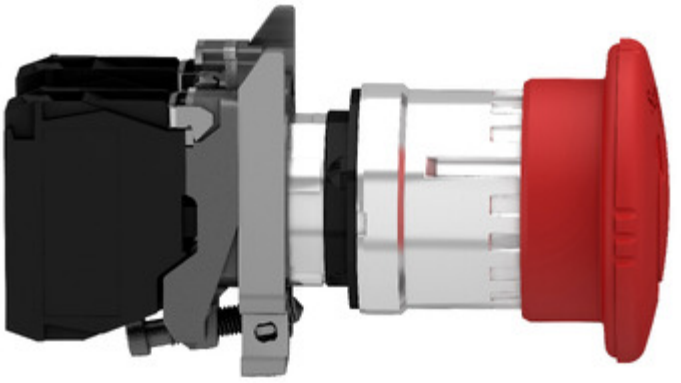



Downloaded from Arrow.com.





Downloaded from Arrow.com.