# 1-Bit Dual-Supply Non-Inverting Level Translator

# NLSV1T34

The NLSV1T34 is a 1−bit configurable dual−supply voltage level translator. The input $A_n$ and output $B_n$ ports are designed to track two different power supply rails, $V_{CCA}$ and $V_{CCB}$ respectively. Both supply rails are configurable from 0.9 V to 4.5 V allowing universal low−voltage translation from the input $A_n$ to the output $B_n$ port.

### Features

- Wide $V_{CCA}$ and $V_{CCB}$ Operating Range: 0.9 V to 4.5 V
- High−Speed w/ Balanced Propagation Delay
- Inputs and Outputs have OVT Protection to 4.5 V
- Non−preferential $V_{CCA}$ and $V_{CCB}$ Sequencing
- Power−Off Protection
- Power−Off High Impedance Inputs and Outputs
- Ultra−Small Packaging: 1.45 mm x 1.0 mm ULLGA6
  2.0 mm x 2.1 mm SC−88A
  1.2 mm x 1.0 mm UDFN6
  1.45 mm x 1.0 mm UDFN6
- NLV Prefix for Automotive and Other Applications Requiring Unique Site and Control Change Requirements; AEC−Q100 Qualified and PPAP Capable
- These are Pb−Free Devices

### Typical Applications

- Mobile Phones, PDAs, Other Portable Devices

### Important Information

- ESD Protection for All Pins:
  HBM (Human Body Model) ≥ 3000 V

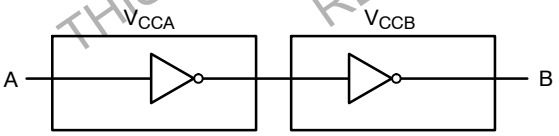


**Figure 1. Logic Diagram**

**ON Semiconductor®**

www.onsemi.com

### MARKING DIAGRAMS

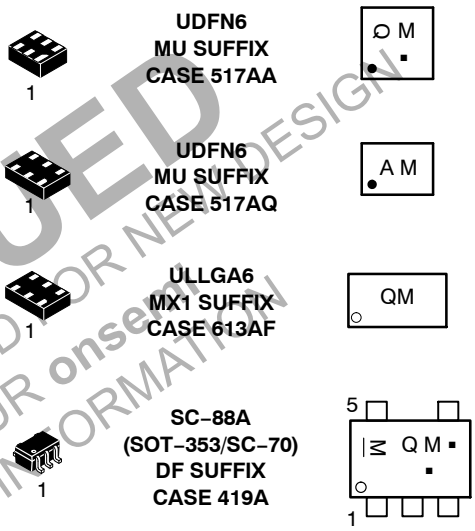


Q, A = Device Code
M = Date Code*
▪ = Pb−Free Package
(Note: Microdot may be in either location)
*Date Code orientation and/or position may vary depending upon manufacturing location.

### PIN ASSIGNMENT

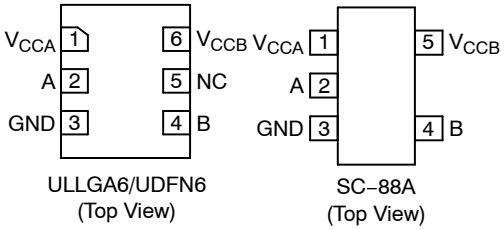


### ORDERING INFORMATION

See detailed ordering and shipping information on page 5 of this data sheet.

DISCONTINUED
THIS DEVICE IS NOT RECOMMENDED FOR NEW DESIGN
PLEASE CONTACT YOUR onsemi REPRESENTATIVE FOR INFORMATION



Downloaded from Arrow.com.

## PIN ASSIGNMENT

| PIN | FUNCTION |
|---|---|
| $V_{CCA}$ | Input Port DC Power Supply |
| $V_{CCB}$ | Output Port DC Power Supply |
| GND | Ground |
| A | Input Port |
| B | Output Port |

## TRUTH TABLE

| INPUTS | OUTPUTS |
|---|---|
| A | B |
| L | L |
| H | H |

## MAXIMUM RATINGS

| Symbol | Rating | | | Value | Condition | Unit |
|---|---|---|---|---|---|---|
| $V_{CCA}$, $V_{CCB}$ | DC Supply Voltage | | | −0.5 to +5.5 | | V |
| $V_I$ | DC Input Voltage | | A | −0.5 to +5.5 | | V |
| $V_O$ | DC Output Voltage | (Power Down) | B | −0.5 to +5.5 | $V_{CCA} = V_{CCB} = 0$ | V |
| | | (Active Mode) | B | −0.5 to +5.5 | | V |
| $I_{IK}$ | DC Input Diode Current | | | −20 | $V_I < GND$ | mA |
| $I_{OK}$ | DC Output Diode Current | | | −50 | $V_O < GND$ | mA |
| $I_O$ | DC Output Source/Sink Current | | | ±50 | | mA |
| $I_{CCA}$, $I_{CCB}$ | DC Supply Current Per Supply Pin | | | ±100 | | mA |
| $I_{GND}$ | DC Ground Current per Ground Pin | | | ±100 | | mA |
| $T_{STG}$ | Storage Temperature | | | −65 to +150 | | °C |

Stresses exceeding those listed in the Maximum Ratings table may damage the device. If any of these limits are exceeded, device functionality should not be assumed, damage may occur and reliability may be affected.

## RECOMMENDED OPERATING CONDITIONS

| Symbol | Parameter | | | Min | Max | Unit |
|---|---|---|---|---|---|---|
| $V_{CCA}$, $V_{CCB}$ | Positive DC Supply Voltage | | | 0.9 | 4.5 | V |
| $V_I$ | Bus Input Voltage | | | GND | 4.5 | V |
| $V_{IO}$ | Bus Output Voltage | (Power Down Mode) | B | GND | 4.5 | V |
| | | (Active Mode) | B | GND | $V_{CCB}$ | V |
| $T_A$ | Operating Temperature Range | | | −40 | +85 | °C |
| $\Delta t / \Delta V$ | Input Transition Rise or Rate<br>$V_I$, from 30% to 70% of $V_{CC}$; $V_{CC}$ = 3.3 V ±0.3 V | | | 0 | 10 | nS |

Functional operation above the stresses listed in the Recommended Operating Ranges is not implied. Extended exposure to stresses beyond the Recommended Operating Ranges limits may affect device reliability.

DISCONTINUED
THIS DEVICE IS NOT RECOMMENDED FOR NEW DESIGN
PLEASE CONTACT YOUR onsemi
REPRESENTATIVE FOR INFORMATION



Downloaded from Arrow.com.

## DC ELECTRICAL CHARACTERISTICS

| Symbol | Parameter | Test Conditions | $V_{CCA}$ (V) | $V_{CCB}$ (V) | −40°C to +85°C | | Unit |
|---|---|---|---|---|---|---|---|
| | | | | | Min | Max | |
| $V_{IH}$ | Input HIGH Voltage | | 3.6 – 4.5 | 0.9 – 4.5 | 2.2 | – | V |
| | | | 2.7 – 3.6 | | 2.0 | – | |
| | | | 2.3 – 2.7 | | 1.6 | – | |
| | | | 1.4 – 2.3 | | 0.65 * $V_{CCA}$ | – | |
| | | | 0.9 – 1.4 | | 0.9 * $V_{CCA}$ | – | |
| $V_{IL}$ | Input LOW Voltage | | 3.6 – 4.5 | 0.9 – 4.5 | – | 0.8 | V |
| | | | 2.7 – 3.6 | | – | 0.8 | |
| | | | 2.3 – 2.7 | | – | 0.7 | |
| | | | 1.4 – 2.3 | | – | 0.35 * $V_{CCA}$ | |
| | | | 0.9 – 1.4 | | – | 0.1 * $V_{CCA}$ | |
| $V_{OH}$ | Output HIGH Voltage | $I_{OH}$ = −100 μA; $V_I$ = $V_{IH}$ | 0.9 – 4.5 | 0.9 – 4.5 | $V_{CCB}$ – 0.2 | – | V |
| | | $I_{OH}$ = −0.5 mA; $V_I$ = $V_{IH}$ | 0.9 | 0.9 | 0.75 * $V_{CCB}$ | – | |
| | | $I_{OH}$ = −2 mA; $V_I$ = $V_{IH}$ | 1.4 | 1.4 | 1.05 | – | |
| | | $I_{OH}$ = −6 mA; $V_I$ = $V_{IH}$ | 1.65 | 1.65 | 1.25 | – | |
| | | | 2.3 | 2.3 | 2.0 | – | |
| | | $I_{OH}$ = −12 mA; $V_I$ = $V_{IH}$ | 2.3 | 2.3 | 1.8 | – | |
| | | | 2.7 | 2.7 | 2.2 | – | |
| | | $I_{OH}$ = −18 mA; $V_I$ = $V_{IH}$ | 2.3 | 2.3 | 1.7 | – | |
| | | | 3.0 | 3.0 | 2.4 | – | |
| | | $I_{OH}$ = −24 mA; $V_I$ = $V_{IH}$ | 3.0 | 3.0 | 2.2 | – | |
| $V_{OL}$ | Output LOW Voltage | $I_{OL}$ = 100 μA; $V_I$ = $V_{IL}$ | 0.9 – 4.5 | 0.9 – 4.5 | – | 0.2 | V |
| | | $I_{OL}$ = 0.5 mA; $V_I$ = $V_{IH}$ | 1.1 | 1.1 | – | 0.3 | |
| | | $I_{OL}$ = 2 mA; $V_I$ = $V_{IH}$ | 1.4 | 1.4 | – | 0.35 | |
| | | $I_{OL}$ = 6 mA; $V_I$ = $V_{IL}$ | 1.65 | 1.65 | – | 0.3 | |
| | | $I_{OL}$ = 12 mA; $V_I$ = $V_{IL}$ | 2.3 | 2.3 | – | 0.4 | |
| | | | 2.7 | 2.7 | – | 0.4 | |
| | | $I_{OL}$ = 18 mA; $V_I$ = $V_{IL}$ | 2.3 | 2.3 | – | 0.6 | |
| | | | 3.0 | 3.0 | – | 0.4 | |
| | | $I_{OL}$ = 24 mA; $V_I$ = $V_{IL}$ | 3.0 | 3.0 | – | 0.55 | |
| $I_I$ | Input Leakage Current | $V_I$ = $V_{CCA}$ or GND | 0.9 – 4.5 | 0.9 – 4.5 | −1.0 | 1.0 | μA |
| $I_{CCA}$ | Quiescent Supply Current | $V_I$ = $V_{CCA}$ or GND; $I_O$ = 0, $V_{CCA}$ = $V_{CCB}$ | 0.9 – 4.5 | 0.9 – 4.5 | – | 2.0 | μA |
| $I_{CCB}$ | Quiescent Supply Current | $V_I$ = $V_{CCA}$ or GND; $I_O$ = 0, $V_{CCA}$ = $V_{CCB}$ | 0.9 – 4.5 | 0.9 – 4.5 | – | 2.0 | μA |
| $I_{CCA}$ + $I_{CCB}$ | Quiescent Supply Current | $V_I$ = $V_{CCA}$ or GND; $I_O$ = 0, $V_{CCA}$ = $V_{CCB}$ | 0.9 – 4.5 | 0.9 – 4.5 | – | 4.0 | μA |
| $I_{OFF}$ | Power OFF Leakage Current | $V_I$ = 4.5 V | 0 | 0 | – | 5.0 | μA |

Product parametric performance is indicated in the Electrical Characteristics for the listed test conditions, unless otherwise noted. Product performance may not be indicated by the Electrical Characteristics if operated under different conditions.

DISCONTINUED
THIS DEVICE IS NOT RECOMMENDED FOR NEW DESIGN
PLEASE CONTACT YOUR onsemi
REPRESENTATIVE FOR INFORMATION



Downloaded from Arrow.com.

## TOTAL STATIC POWER CONSUMPTION ($I_{CCA}$ + $I_{CCB}$)

| | −40°C to +85°C | | | | | | | | | | |
|---|---|---|---|---|---|---|---|---|---|---|---|
| | $V_{CCB}$ (V) | | | | | | | | | | |
| | 4.5 | | 3.3 | | 2.8 | | 1.8 | | 0.9 | | |
| $V_{CCA}$ (V) | Min | Max | Min | Max | Min | Max | Min | Max | Min | Max | Unit |
| 4.5 | | 2 | | 2 | | 2 | | 2 | | < 1.5 | μA |
| 3.3 | | 2 | | 2 | | 2 | | 2 | | < 1.5 | μA |
| 2.8 | | < 2 | | < 1 | | < 1 | | < 0.5 | | < 0.5 | μA |
| 1.8 | | < 1 | | < 1 | | < 0.5 | | < 0.5 | | < 0.5 | μA |
| 0.9 | | < 0.5 | | < 0.5 | | < 0.5 | | < 0.5 | | < 0.5 | μA |

NOTE: Connect ground before applying supply voltage $V_{CCA}$ or $V_{CCB}$. This device is designed with the feature that the power−up sequence of $V_{CCA}$ and $V_{CCB}$ will not damage the IC.

## AC ELECTRICAL CHARACTERISTICS

| | | | −40°C to +85°C | | | | | | | | | |
|---|---|---|---|---|---|---|---|---|---|---|---|---|
| | | | $V_{CCB}$ (V) | | | | | | | | | |
| | | | 4.5 | | 3.3 | | 2.8 | | 1.8 | | 1.2 | |
| Symbol | Parameter | $V_{CCA}$ (V) | Min | Max | Min | Max | Min | Max | Min | Max | Min | Max | Unit |
| $t_{PLH}$, $t_{PHL}$ (Note 1) | Propagation Delay, A to B | 4.5 | | 1.6 | | 1.8 | | 2.0 | | 2.1 | | 2.3 | nS |
| | | 3.3 | | 1.7 | | 1.9 | | 2.1 | | 2.3 | | 2.6 | |
| | | 2.8 | | 1.9 | | 2.1 | | 2.3 | | 2.5 | | 2.8 | |
| | | 1.8 | | 2.1 | | 2.4 | | 2.5 | | 2.7 | | 3.0 | |
| | | 1.2 | | 2.4 | | 2.7 | | 2.8 | | 3.0 | | 3.3 | |

1. Propagation delays defined per Figure 2.

## CAPACITANCE

| Symbol | Parameter | Test Conditions | Typ (Note 2) | Unit |
|---|---|---|---|---|
| $C_{I/O}$ | I/O Pin Input Capacitance | $V_{CCA}$ = $V_{CCB}$ = 3.3 V, $V_I$ = 0 V or $V_{CCA/B}$ | 5.0 | pF |
| $C_{PD}$ | Power Dissipation Capacitance | $V_{CCA}$ = $V_{CCB}$ = 3.3 V, $V_I$ = 0 V or $V_{CCA}$, f = 10 MHz | 5.0 | pF |

2. Typical values are at $T_A$ = +25°C.
3. $C_{PD}$ is defined as the value of the IC's equivalent capacitance from which the operating current can be calculated from: $I_{CC(operating)} \cong C_{PD} \times V_{CC} \times f_{IN}$ where $I_{CC} = I_{CCA} + I_{CCB}$.

DISCONTINUED
THIS DEVICE IS NOT RECOMMENDED FOR NEW DESIGN
PLEASE CONTACT YOUR onsemi REPRESENTATIVE FOR INFORMATION



Downloaded from Arrow.com.

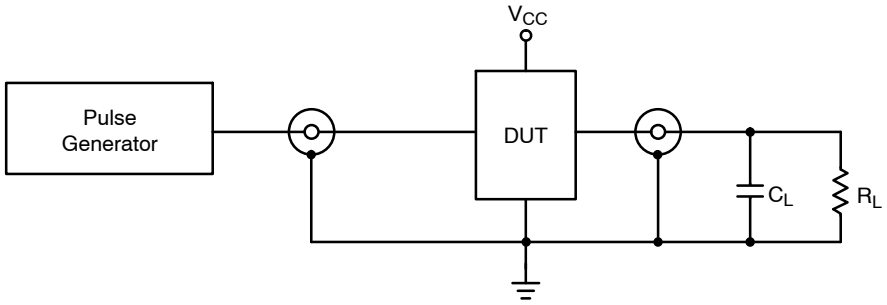


**Figure 2. AC (Propagation Delay) Test Circuit**

| Test | Switch |
|---|---|
| $C_L$ = 15 pF or equivalent (includes probe and jig capacitance)<br>$R_L$ = 2 kΩ or equivalent<br>$Z_{OUT}$ of pulse generator = 50 Ω | |

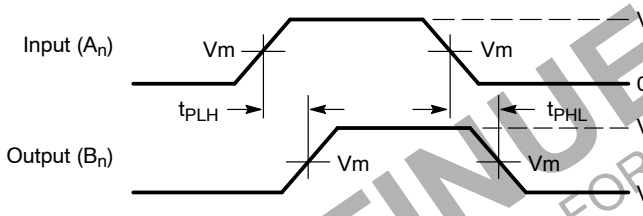


**Waveform 1 – Propagation Delays**
$t_R = t_F$ = 2.0 ns, 10% to 90%; f = 1 MHz; $t_W$ = 500 ns

**Figure 3. AC (Propagation Delay) Test Circuit Waveforms**

| Symbol | $V_{CC}$ |
|---|---|
| | **0.9 V – 4.5 V** |
| $V_{mA}$ | $V_{CCA}/2$ |
| $V_{mB}$ | $V_{CCB}/2$ |

DISCONTINUED
THIS DEVICE IS NOT RECOMMENDED FOR NEW DESIGN
PLEASE CONTACT YOUR onsemi
REPRESENTATIVE FOR INFORMATION

## ORDERING INFORMATION

| Device | Package | Shipping† |
|---|---|---|
| NLSV1T34MUTBG | UDFN6, 1.2 x 1.0, 0.4P<br>(Pb−Free) | 3000 / Tape & Reel |
| NLSV1T34AMUTAG | UDFN6, 1.45 x 1.0, 0.5P<br>(Pb−Free) | 3000 / Tape & Reel |
| NLSV1T34AMUTCG | | |
| NLSV1T34AMX1TCG | ULLGA6<br>(Pb−Free) | 3000 / Tape & Reel |
| NLSV1T34DFT2G | SC−88A<br>(Pb−Free) | 3000 / Tape & Reel |
| NLVSV1T34DFT2G* | | |

†For information on tape and reel specifications, including part orientation and tape sizes, please refer to our Tape and Reel Packaging Specifications Brochure, BRD8011/D.
*NLV Prefix for Automotive and Other Applications Requiring Unique Site and Control Change Requirements; AEC−Q100 Qualified and PPAP Capable



Downloaded from Arrow.com.

## PACKAGE DIMENSIONS

**SC−88A (SC−70−5/SOT−353)**
CASE 419A−02
ISSUE L

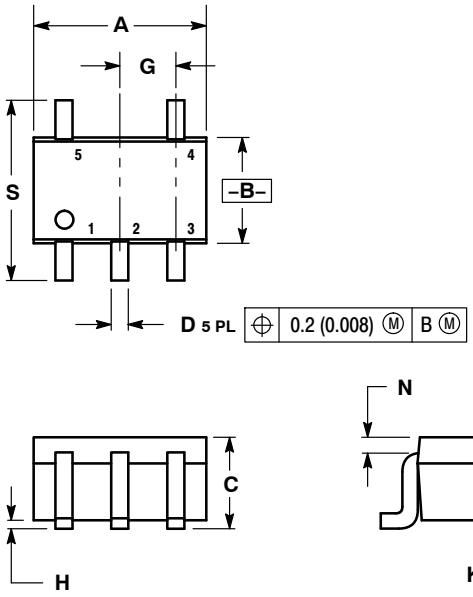


NOTES:
1. DIMENSIONING AND TOLERANCING PER ANSI Y14.5M, 1982.
2. CONTROLLING DIMENSION: INCH.
3. 419A−01 OBSOLETE. NEW STANDARD 419A−02.
4. DIMENSIONS A AND B DO NOT INCLUDE MOLD FLASH, PROTRUSIONS, OR GATE BURRS.

| | INCHES | | MILLIMETERS | |
|---|---|---|---|---|
| DIM | MIN | MAX | MIN | MAX |
| A | 0.071 | 0.087 | 1.80 | 2.20 |
| B | 0.045 | 0.053 | 1.15 | 1.35 |
| C | 0.031 | 0.043 | 0.80 | 1.10 |
| D | 0.004 | 0.012 | 0.10 | 0.30 |
| G | 0.026 BSC | | 0.65 BSC | |
| H | --- | 0.004 | --- | 0.10 |
| J | 0.004 | 0.010 | 0.10 | 0.25 |
| K | 0.004 | 0.012 | 0.10 | 0.30 |
| N | 0.008 REF | | 0.20 REF | |
| S | 0.079 | 0.087 | 2.00 | 2.20 |

DISCONTINUED
THIS DEVICE IS NOT RECOMMENDED FOR NEW DESIGN
PLEASE CONTACT YOUR onsemi
REPRESENTATIVE FOR INFORMATION

## SOLDER FOOTPRINT

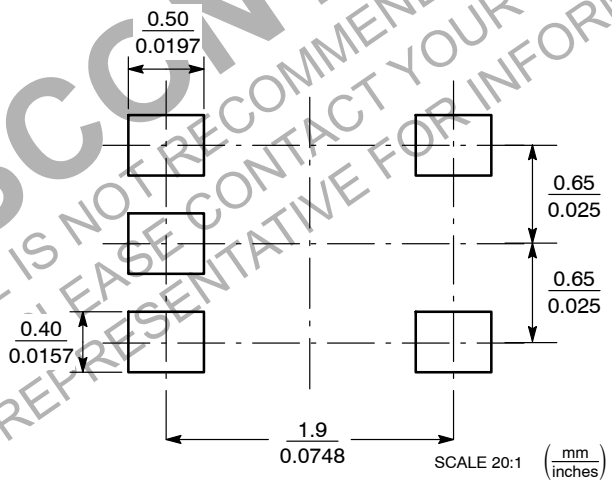


*For additional information on our Pb−Free strategy and soldering details, please download the ON Semiconductor Soldering and Mounting Techniques Reference Manual, SOLDERRM/D.



Downloaded from Arrow.com.

## PACKAGE DIMENSIONS

**UDFN6, 1.2x1.0, 0.4P**
CASE 517AA
ISSUE D

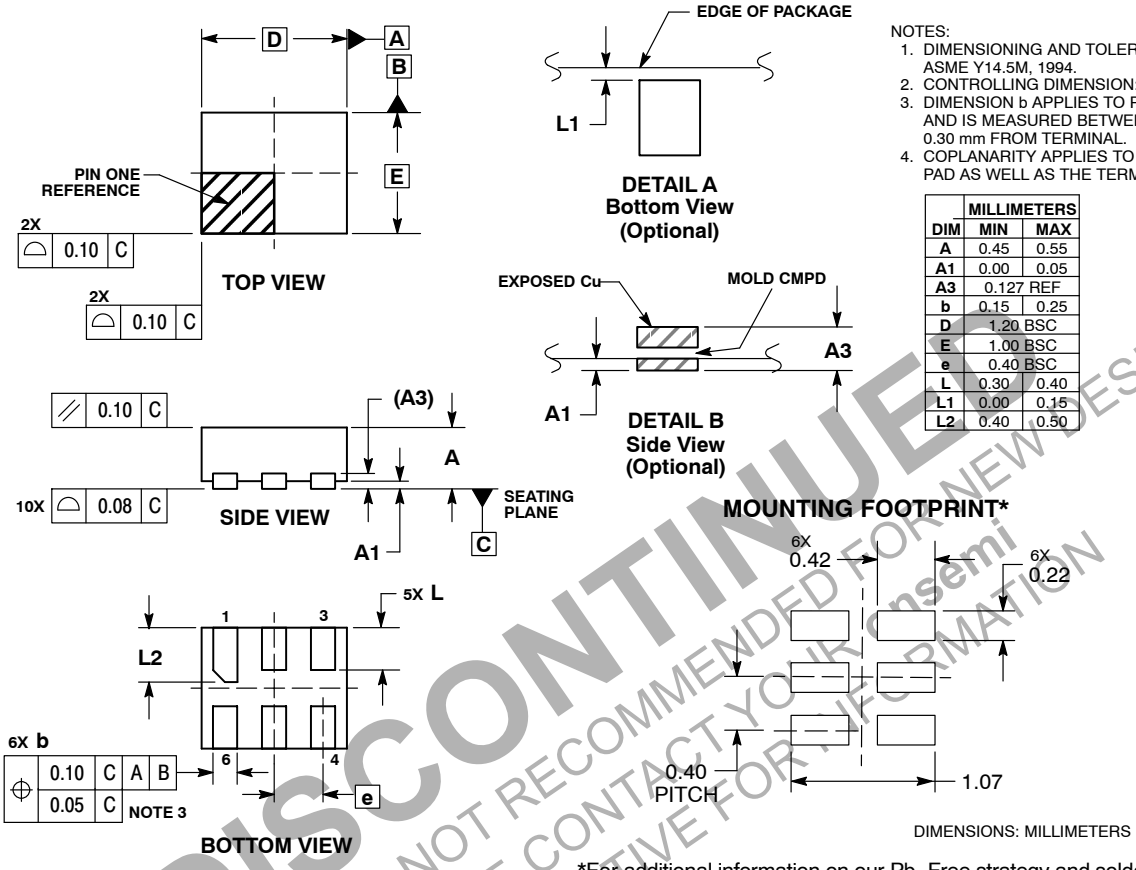


NOTES:
1. DIMENSIONING AND TOLERANCING PER ASME Y14.5M, 1994.
2. CONTROLLING DIMENSION: MILLIMETERS.
3. DIMENSION b APPLIES TO PLATED TERMINAL AND IS MEASURED BETWEEN 0.25 AND 0.30 mm FROM TERMINAL.
4. COPLANARITY APPLIES TO THE EXPOSED PAD AS WELL AS THE TERMINALS.

| | MILLIMETERS | |
|---|---|---|
| DIM | MIN | MAX |
| A | 0.45 | 0.55 |
| A1 | 0.00 | 0.05 |
| A3 | 0.127 REF | |
| b | 0.15 | 0.25 |
| D | 1.20 BSC | |
| E | 1.00 BSC | |
| e | 0.40 BSC | |
| L | 0.30 | 0.40 |
| L1 | 0.00 | 0.15 |
| L2 | 0.40 | 0.50 |

*For additional information on our Pb−Free strategy and soldering details, please download the ON Semiconductor Soldering and Mounting Techniques Reference Manual, SOLDERRM/D.

DISCONTINUED
THIS DEVICE IS NOT RECOMMENDED FOR NEW DESIGN
PLEASE CONTACT YOUR onsemi
REPRESENTATIVE FOR INFORMATION



Downloaded from Arrow.com.

## PACKAGE DIMENSIONS

**UDFN6, 1.45x1.0, 0.5P**
CASE 517AQ
ISSUE O

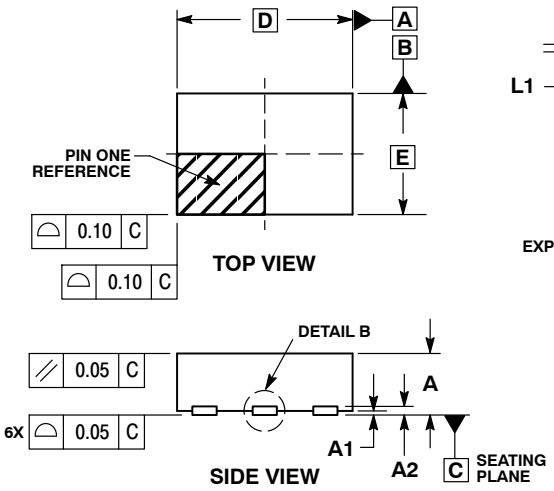


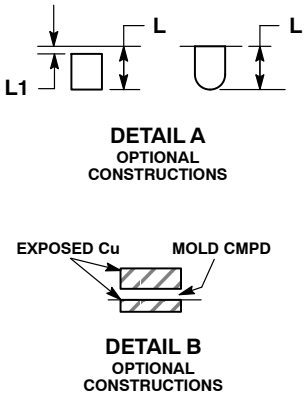


NOTES:
1. DIMENSIONING AND TOLERANCING PER ASME Y14.5M, 1994.
2. CONTROLLING DIMENSION: MILLIMETERS.
3. DIMENSION b APPLIES TO PLATED TERMINAL AND IS MEASURED BETWEEN 0.15 AND 0.30 mm FROM THE TERMINAL TIP.

| | MILLIMETERS | |
|---|---|---|
| DIM | MIN | MAX |
| A | 0.45 | 0.55 |
| A1 | 0.00 | 0.05 |
| A2 | 0.07 REF | |
| b | 0.20 | 0.30 |
| D | 1.45 BSC | |
| E | 1.00 BSC | |
| e | 0.50 BSC | |
| L | 0.30 | 0.40 |
| L1 | --- | 0.15 |

**MOUNTING FOOTPRINT**

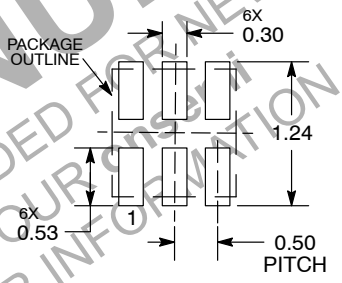


DIMENSIONS: MILLIMETERS

*For additional information on our Pb−Free strategy and soldering details, please download the ON Semiconductor Soldering and Mounting Techniques Reference Manual, SOLDERRM/D.

DISCONTINUED
THIS DEVICE IS NOT RECOMMENDED FOR NEW DESIGN
PLEASE CONTACT YOUR onsemi
REPRESENTATIVE FOR INFORMATION



Downloaded from Arrow.com.

## PACKAGE DIMENSIONS

**ULLGA6 1.45x1.0, 0.5P**
CASE 613AF
ISSUE A

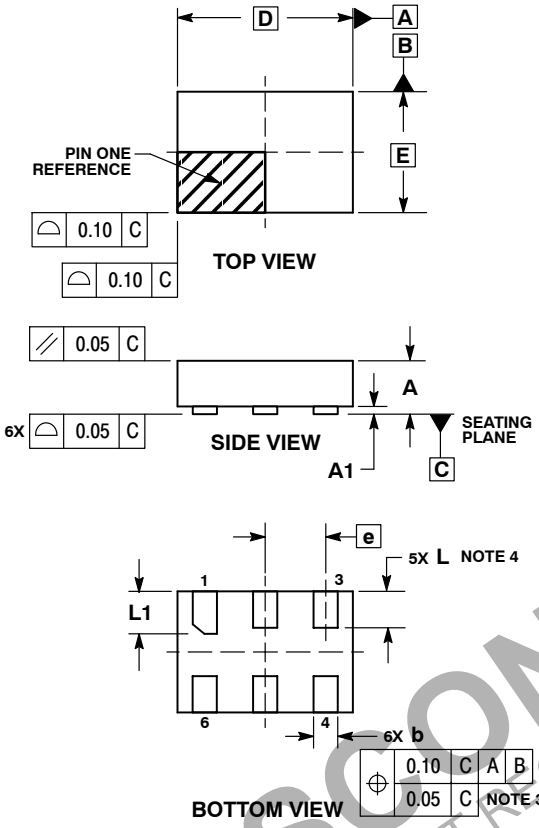


NOTES:
1. DIMENSIONING AND TOLERANCING PER ASME Y14.5M, 1994.
2. CONTROLLING DIMENSION: MILLIMETERS.
3. DIMENSION b APPLIES TO PLATED TERMINAL AND IS MEASURED BETWEEN 0.15 AND 0.30 mm FROM THE TERMINAL TIP.
4. A MAXIMUM OF 0.05 PULL BACK OF THE PLATED TERMINAL FROM THE EDGE OF THE PACKAGE IS ALLOWED.

| | MILLIMETERS | |
|---|---|---|
| DIM | MIN | MAX |
| A | --- | 0.40 |
| A1 | 0.00 | 0.05 |
| b | 0.15 | 0.25 |
| D | 1.45 BSC | |
| E | 1.00 BSC | |
| e | 0.50 BSC | |
| L | 0.25 | 0.35 |
| L1 | 0.30 | 0.40 |

**MOUNTING FOOTPRINT SOLDERMASK DEFINED***

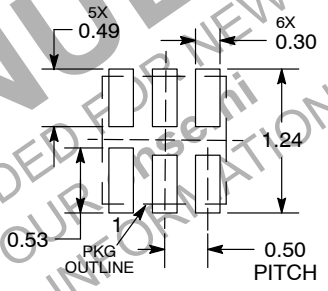


DIMENSIONS: MILLIMETERS

*For additional information on our Pb−Free strategy and soldering details, please download the ON Semiconductor Soldering and Mounting Techniques Reference Manual, SOLDERRM/D.

DISCONTINUED
THIS DEVICE IS NOT RECOMMENDED FOR NEW DESIGN
PLEASE CONTACT YOUR onsemi
REPRESENTATIVE FOR INFORMATION

**onsemi**, ONSEMI, and other names, marks, and brands are registered and/or common law trademarks of Semiconductor Components Industries, LLC dba "**onsemi**" or its affiliates and/or subsidiaries in the United States and/or other countries. **onsemi** owns the rights to a number of patents, trademarks, copyrights, trade secrets, and other intellectual property. A listing of **onsemi**'s product/patent coverage may be accessed at www.onsemi.com/site/pdf/Patent−Marking.pdf. **onsemi** reserves the right to make changes at any time to any products or information herein, without notice. The information herein is provided "as−is" and **onsemi** makes no warranty, representation or guarantee regarding the accuracy of the information, product features, availability, functionality, or suitability of its products for any particular purpose, nor does **onsemi** assume any liability arising out of the application or use of any product or circuit, and specifically disclaims any and all liability, including without limitation special, consequential or incidental damages. Buyer is responsible for its products and applications using **onsemi** products, including compliance with all laws, regulations and safety requirements or standards, regardless of any support or applications information provided by **onsemi**. "Typical" parameters which may be provided in **onsemi** data sheets and/or specifications can and do vary in different applications and actual performance may vary over time. All operating parameters, including "Typicals" must be validated for each customer application by customer's technical experts. **onsemi** does not convey any license under any of its intellectual property rights nor the rights of others. **onsemi** products are not designed, intended, or authorized for use as a critical component in life support systems or any FDA Class 3 medical devices or medical devices with a same or similar classification in a foreign jurisdiction or any devices intended for implantation in the human body. Should Buyer purchase or use **onsemi** products for any such unintended or unauthorized application, Buyer shall indemnify and hold **onsemi** and its officers, employees, subsidiaries, affiliates, and distributors harmless against all claims, costs, damages, and expenses, and reasonable attorney fees arising out of, directly or indirectly, any claim of personal injury or death associated with such unintended or unauthorized use, even if such claim alleges that **onsemi** was negligent regarding the design or manufacture of the part. **onsemi** is an Equal Opportunity/Affirmative Action Employer. This literature is subject to all applicable copyright laws and is not for resale in any manner.

### ADDITIONAL INFORMATION

**TECHNICAL PUBLICATIONS**:
**Technical Library:** www.onsemi.com/design/resources/technical−documentation
**onsemi Website:** www.onsemi.com

**ONLINE SUPPORT**: www.onsemi.com/support
**For additional information, please contact your local Sales Representative at** www.onsemi.com/support/sales

◊

Downloaded from Arrow.com.