Alle Rechte vorbehalten/ *All rights reserved*

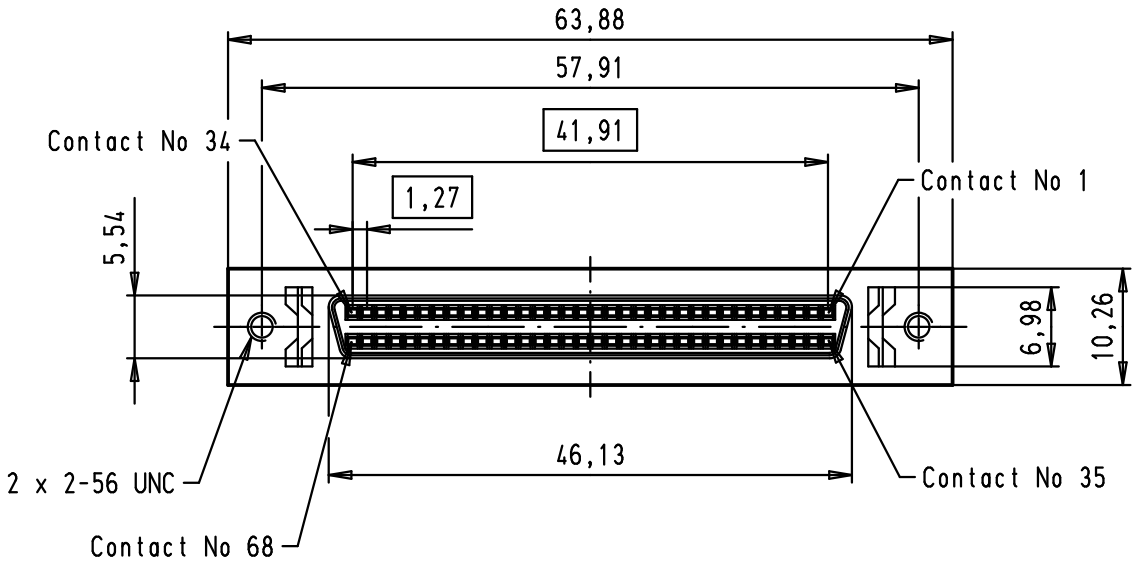

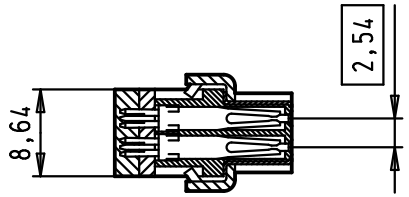

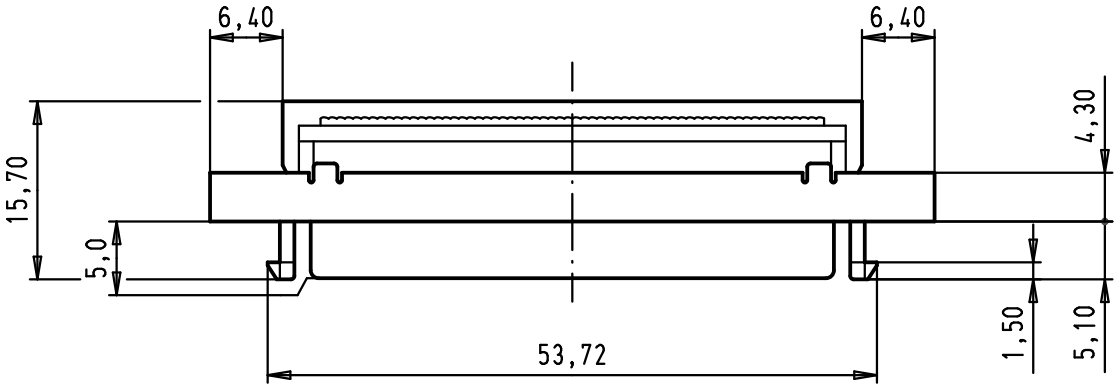

Panel cutout

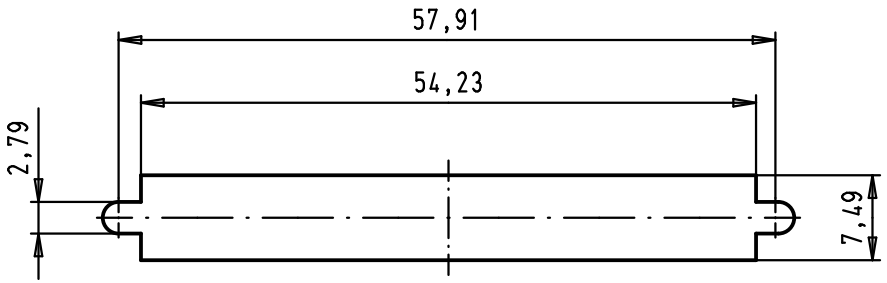

				Dat.	Name
			Detail.	30/08/00	ALSPACE
			Insp.		
			Stand.		
EC00328	27/03/09	PK			
27941	30/08/00	ALSPACE			
Mod.	Dat.	Name			

All Dim. in mm
Orig. Size DIN A 4

HARTING EURL
F-95972 Paris

Har-mik® I/O pin/socket
SCSI 2
IDC panel 68 poles female connector
with 2-56 UNC threads and latches

Maßstab/ *Scale* 1,5:1

TB 60 04 068 5343

Sub.

Blatt/ *Page* 1/1

Downloaded from Arrow.com.