SYMBOL DEFINITION			MISSING SYMBOLS
A DIMENSION WITHOUT AN INSPECTION REPORT SYMBOL (9) DOES NOT REQUIRE INSPECTION. IT MAY BE CONTROLLED ON THE INDIVIDUAL COMPONENT DRAWING.	TOTAL NO OF INSPECTIONS REQUIRED	11	NO MISSING SYMBOL NUMBER
	LAST NO. USED	9	

DWG STATUS					ZONE	REVISION HISTORY	AUTH	DR	APVD 1	APVD 2
DATE	STG	REV	N/P	CHG						
01APO3	R	A2	-	-		REDRAWN TO PD & UPDATED PDM ATTRIBUTES	239112	RAO	RVP	JDV
02FE05	R	A3	-	-		ADDED DIM #9;DIM B WAS PROCESS SENSITIVE	263966	END	END	JS
14MR05	R	A4	-	-		ADDED PROCESSING NOTES AND REVISED MATERIAL DESCRIPTION	265839	MDH	JAA	WLM

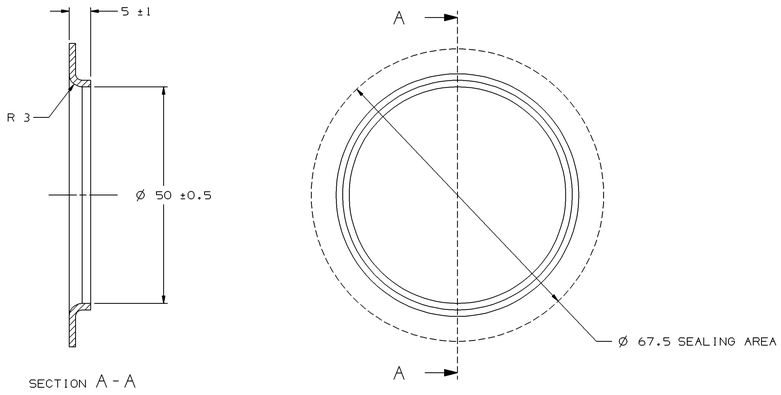

MOUNTING HOLE DETAIL

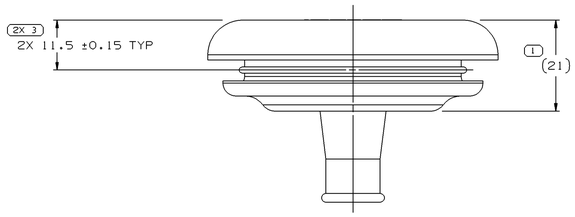

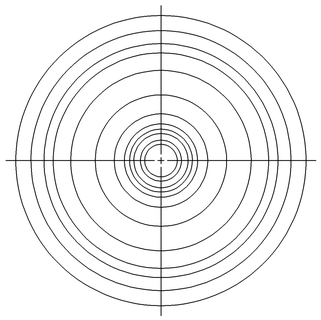

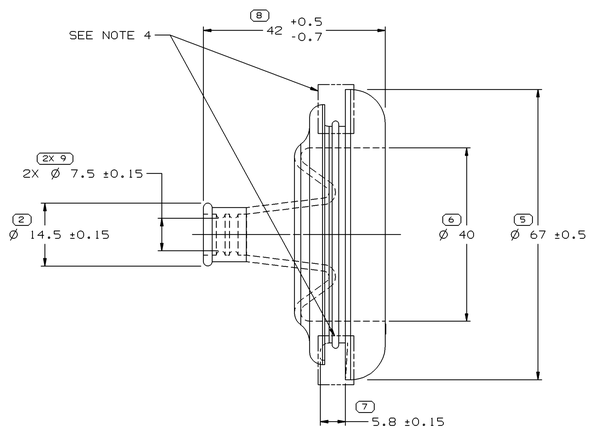

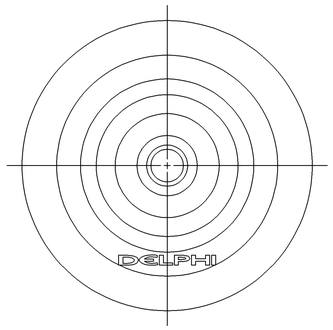

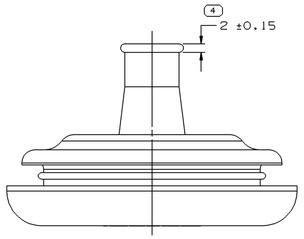

NOTES

1. UNLESS OTHERWISE SPECIFIED AND/OR INDICATED:

   DIMENSIONS ARE TO FACE OF VIEW SHOWN AND AUTOMATICALLY ROUNDED BY COMPUTER FOR INSPECTION (SEE MATH MODEL FOR PRECISE DIMENSIONS). FOR ALL OTHER DIMENSIONS NOT SHOWN BUT REQUIRED FOR TOOL BUILD, SEE MATH MODEL FOR PRECISE TOOL PATH DATA.

2. THIS PART IS NOT CONTROLLED FOR AUTOMATIC FEEDING.
3. PART IS SYMMETRICAL ABOUT CENTERLINES EXCEPT AS NOTED.
4. SEALING SURFACES MUST BE FREE OF SINKS, NFO'S, VOIDS, KNIT/FLOW LINES, ETC.
5. (2.3)X(0.1) RAISED DELPHI CORPORATE BRAND TO BE LOCATED ON ANY EXTERIOR SURFACE, PREFERABLY VISIBLE AT FINAL ASSEMBLY. OPTIONAL CONSTRUCTION TO BE "PED" OR NO LOGO.
6. THIS GROMMET TO BE USED WITH HARNESS BUNDLE SMOOTH TAPE WRAPPED USING 5 MIL TAPE HAVING NO SLITS ON EDGES.
7. THIS GROMMET FOR MIN HARNESS BUNDLE DIA OF 8.5

PROCESSING NOTES:

1. THE FOLLOWING NUMBER IS TO BE PUT ON THE PRODUCT DRAWING AS THE MAXIMUM ALLOWABLE STRETCH DIMENSION: 31MM AS MEASURED IN THE FOLLOWING FASHION:

MAXIMUM ALLOWABLE DIMENSION OF STRETCHED GROMMET NECK WHEN USING A 4 BILL SPREADER

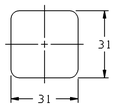

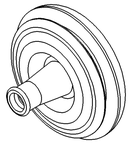

(9) PROCESS SENSITIVE DIMENSION

DIMENSIONS ENCLOSED IN ( ), INDICATE REFERENCE DIMENSIONS AND NO TOLERANCE LIMITS ARE ESTABLISHED

DIMENSIONAL RANGE (MM) CHART C				
FROM	>0	>25	>60	>80
TO	25	60	80	
TOLERANCE UNLESS OTHERWISE SPECIFIED				
	±0.3	±0.5	±0.6	±0.75%
ANGULAR TOLERANCE ±2°				

DWG TYPE: PART DRAWING

STYLE

VOLUME (CM³): 30.556

DISTR CODE

UNLESS OTHERWISE SPECIFIED

THIS DOCUMENT IS IN ACCORDANCE WITH ASME Y14.5M-1994 AS AMENDED BY THE DM GLOBAL DIMENSIONING AND TOLERANCING ADDENDUM - 1997. ALL GEOMETRIC TOLERANCES AND RELATED DATUMS APPLY RFS. RULE #1(PERFECT FORM AT MMC) DOES NOT APPLY WHEN RELATIONSHIP BETWEEN FEATURES IS ESTABLISHED BY ORIENTATION OR LOCATION TOLERANCES. SEPARATE POSITION CALLOUTS MAY BE GAGED SEPARATELY, REGARDLESS OF DATUM REFERENCE.

ALL DIMENSIONS ARE IN MILLIMETERS

REFERENCE

THIRD ANGLE PROJECTION

DO NOT SCALE

USE MATH DATA

UNIGRAPHICS

DELPHI

DELPHI PACKARD ELECTRIC SYSTEMS
WARREN, OH

		DATE
DR		
APVD1	R. AVILA	01APO3
APVD2	R. VILLANUEVA	01APO3
APVD3	J. DEL VAL	03APO3
APVD4		
APVD5		

SUBSTANCES OF CONCERN AND RECYCLED CONTENT PER DELPHI 10949001

MATERIAL
M4433002

DRAWING NAME
GROM

DRAWING NUMBER
12092906

SIZE	SCALE	FRAME NO	SHEET NO	STG	REV	N/P
AO	2:1	1 OF 1	1 OF 1	R	A4	-

Downloaded from Arrow.com.