© 2022 TE Connectivity. All Rights Reserved.

REVISIONS					
P	LTR	DESCRIPTION	DATE	DWN	APVD
	A	INITIAL REVISION	25MAR2022	KR	RM

Single Seal

SECTION A-A

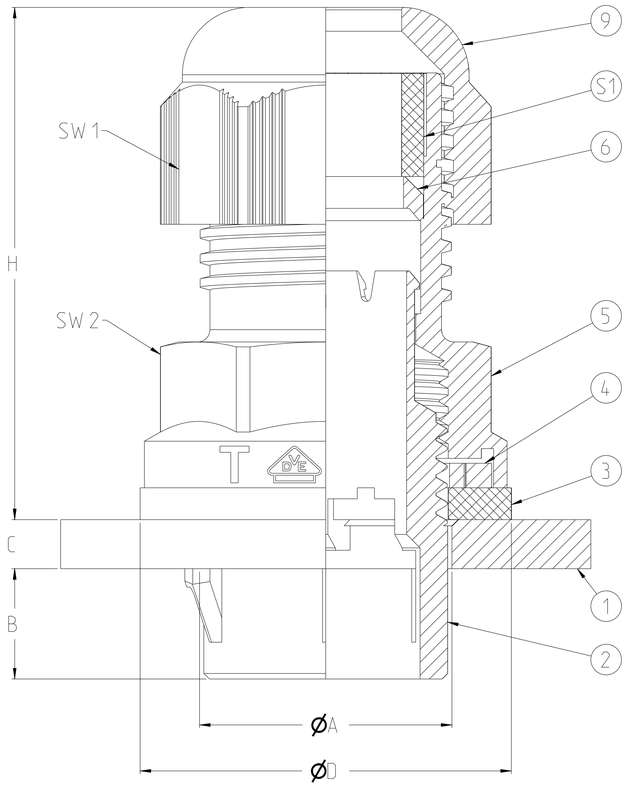

Double Seal

SECTION A-A

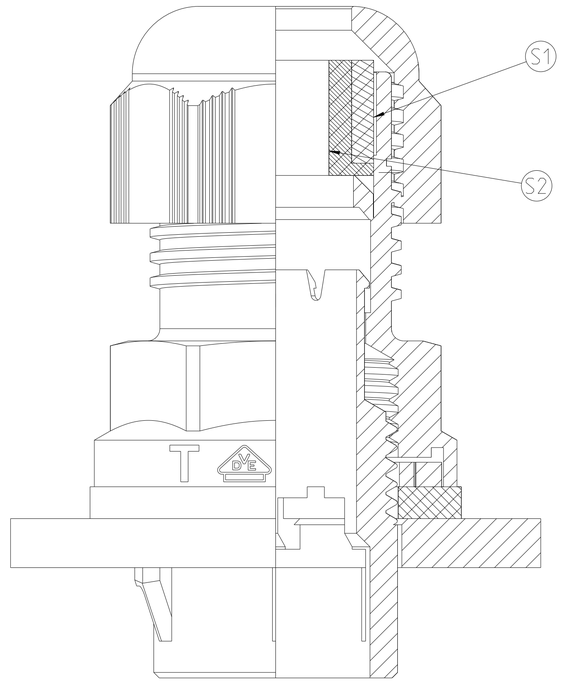

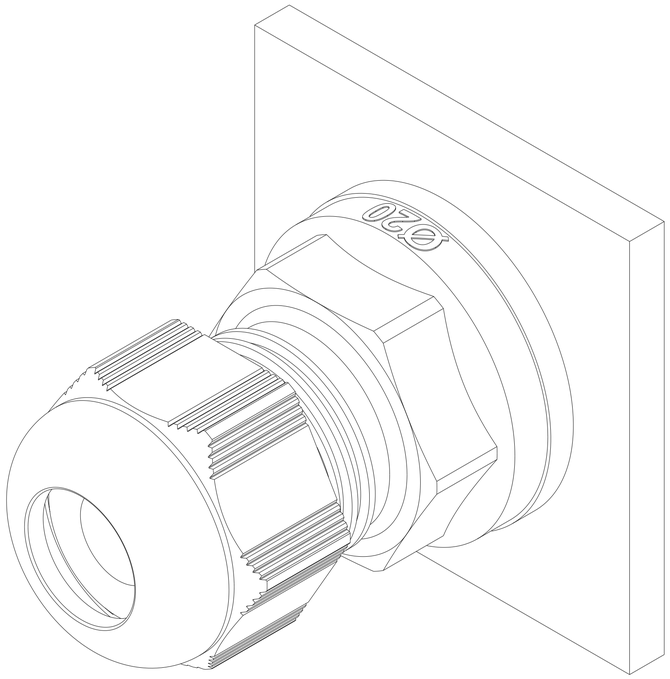

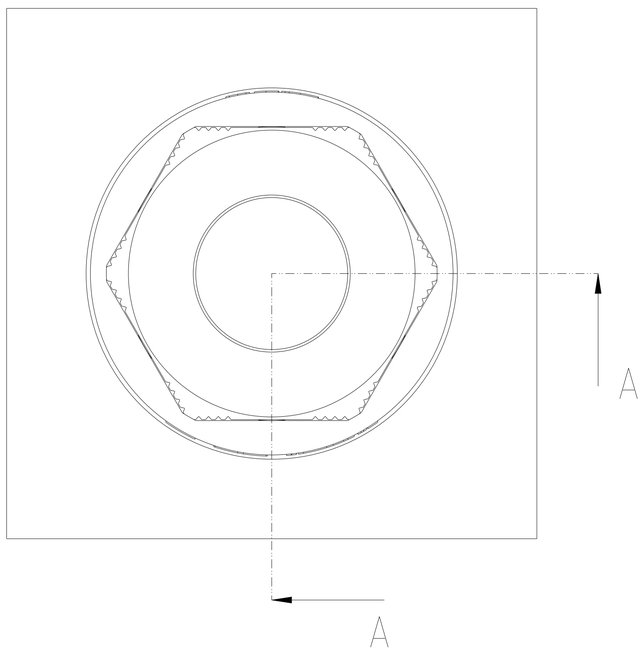

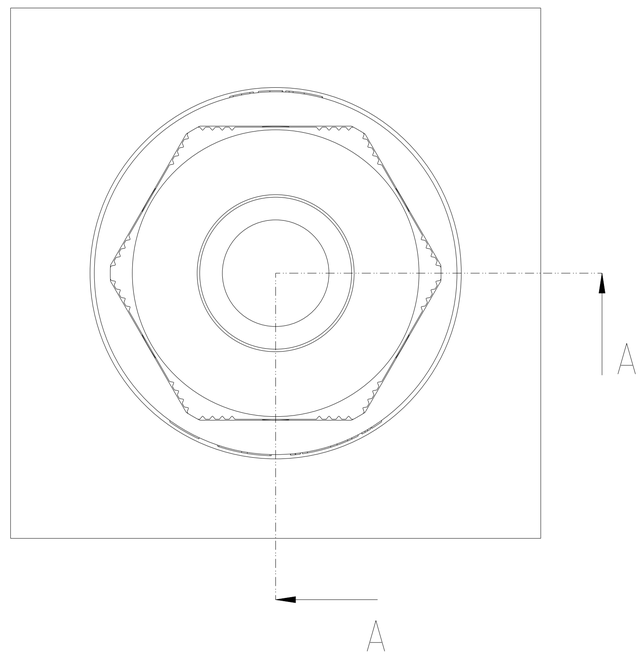

NOTE:
The products with BMOSS code include silicone gasket and seal.

RPT	QTY	DOC TITLE	DRAWING NUMBER	MATERIAL	COMMENTS
9	1	CAP	-	PA6 V2	-
8	1	OUTER SEAL (S1)	-	CR. SILICONE	-
7	1	INNER SEAL (S2)	-	CR. SILICONE	-
6	1	PLUG IN INNER RING	-	PA6 V2	-
5	1	PLUG IN UPPER BODY WITH FLANGE	-	PA6 V2	-
4	1	PLUG IN TAB WASHER	-	PA66	-
3	1	PLUG IN FRICTION GASKET	-	CR. SILICONE	-
2	1	PLUG IN BOTTOM BODY WITH GUIDE	-	PA6 V2	-
1	1	ENCLOSURE	-	-	-

THIS DRAWING IS A CONTROLLED DOCUMENT.

DIMENSIONS: mm

TOLERANCES UNLESS OTHERWISE SPECIFIED:
0 PLC ±-
1 PLC ±1
2 PLC ±1
3 PLC ±1
4 PLC ±1
ANGLES ±-

MATERIAL: REF. TABLE
FINISH: -

DWN: Rajan n, Kasi 25MAR2022
CHK: Rafeeq, Mohd 25MAR2022
APVD: Rafeeq, Mohd 25MAR2022
PRODUCT SPEC: SNAP-IN-GLAND-PA
APPLICATION SPEC: -
WEIGHT: -

TE Connectivity

NAME: - SNAP-IN-GLAND-PA -

SIZE	CAGE CODE	DRAWING NO	RESTRICTED TO
A1	00779	C-1SNP061373-0100	-

CUSTOMER DRAWING | SCALE 4:1 | SHEET 1 OF 2 | REV A1

4805 (3/13)

Downloaded from Arrow.com.

© 2022 TE Connectivity. All Rights Reserved.

TCPN	TE Product Type (Entrelec)	RAL NUMBER	COLOR	Snap Size Ø	Seal Type	ØA	ØD	ØSD	B	C	H	SW 1	SW 2	Clamping Range Ø min-max	Clamping Range (S1) (Outer Seal)	Clamping Range (S1+S2) (Outer Seal+Inner Seal)
1SNG622001R0000	EP-SIG-SZ16-LGR-A	7035	L.Grey	16.0	Double	16.2 - 16.4	26.5	15.9	9.0	0.5 - 4.0	42.5	22	22	3.0 - 10.0	5.0 - 10.0	3.0 - 5.0
1SNG622002R0000	EP-SIG-SZ16-GR-A	7001	Grey	16.0	Double	16.2 - 16.4	26.5	15.9	9.0	0.5 - 4.0	42.5	22	22	3.0 - 10.0	5.0 - 10.0	3.0 - 5.0
1SNG622003R0000	EP-SIG-SZ16-BL-A	9005	Black	16.0	Double	16.2 - 16.4	26.5	15.9	9.0	0.5 - 4.0	42.5	22	22	3.0 - 10.0	5.0 - 10.0	3.0 - 5.0
1SNG622004R0000	EP-SIG-SZ16-LGR-B	7035	L.Grey	16.0	Single	16.2 - 16.4	26.5	15.9	9.0	0.5 - 4.0	42.5	22	22	3.0 - 10.0	5.0 - 10.0	-
1SNG622005R0000	EP-SIG-SZ16-GR-B	7001	Grey	16.0	Single	16.2 - 16.4	26.5	15.9	9.0	0.5 - 4.0	42.5	22	22	3.0 - 10.0	5.0 - 10.0	-
1SNG622006R0000	EP-SIG-SZ16-BL-B	9005	Black	16.0	Single	16.2 - 16.4	26.5	15.9	9.0	0.5 - 4.0	42.5	22	22	3.0 - 10.0	5.0 - 10.0	-
1SNG622007R0000	EP-SIG-SZ20-LGR-A	7035	L.Grey	20.0	Double	20.2 - 20.4	30.3	19.9	9.0	0.5 - 4.0	41.5	24	24	5.0 - 12.0	6.0 - 12.0	5.0 - 6.0
1SNG622008R0000	EP-SIG-SZ20-GR-A	7001	Grey	20.0	Double	20.2 - 20.4	30.3	19.9	9.0	0.5 - 4.0	41.5	24	24	5.0 - 12.0	6.0 - 12.0	5.0 - 6.0
1SNG622009R0000	EP-SIG-SZ20-BL-A	9005	Black	20.0	Double	20.2 - 20.4	30.3	19.9	9.0	0.5 - 4.0	41.5	24	24	5.0 - 12.0	6.0 - 12.0	5.0 - 6.0
1SNG622010R0000	EP-SIG-SZ20-LGR-B	7035	L.Grey	20.0	Double	20.2 - 20.4	30.3	19.9	9.0	0.5 - 4.0	41.5	25	25	3.0 - 13.0	7.0 - 13.0	3.0 - 7.0
1SNG622011R0000	EP-SIG-SZ20-GR-B	7001	Grey	20.0	Double	20.2 - 20.4	30.3	19.9	9.0	0.5 - 4.0	41.5	25	25	3.0 - 13.0	7.0 - 13.0	3.0 - 7.0
1SNG622012R0000	EP-SIG-SZ20-BL-B	9005	Black	20.0	Double	20.2 - 20.4	30.3	19.9	9.0	0.5 - 4.0	41.5	25	25	3.0 - 13.0	7.0 - 13.0	3.0 - 7.0
1SNG622013R0000	EP-SIG-SZ20-LGR-C	7035	L.Grey	20.0	Single	20.2 - 20.4	30.3	19.9	9.0	0.5 - 4.0	41.5	24	24	6.0 - 12.0	6.0 - 12.0	-
1SNG622014R0000	EP-SIG-SZ20-GR-C	7001	Grey	20.0	Single	20.2 - 20.4	30.3	19.9	9.0	0.5 - 4.0	41.5	24	24	6.0 - 12.0	6.0 - 12.0	-
1SNG622015R0000	EP-SIG-SZ20-BL-C	9005	Black	20.0	Single	20.2 - 20.4	30.3	19.9	9.0	0.5 - 4.0	41.5	24	24	6.0 - 12.0	6.0 - 12.0	-
1SNG622016R0000	EP-SIG-SZ20-LGR-D	7035	L.Grey	20.0	Single	20.2 - 20.4	30.3	19.9	9.0	0.5 - 4.0	41.5	25	25	7.0 - 13.0	7.0 - 13.0	-
1SNG622017R0000	EP-SIG-SZ20-GR-D	7001	Grey	20.0	Single	20.2 - 20.4	30.3	19.9	9.0	0.5 - 4.0	41.5	25	25	7.0 - 13.0	7.0 - 13.0	-
1SNG622018R0000	EP-SIG-SZ20-BL-D	9005	Black	20.0	Single	20.2 - 20.4	30.3	19.9	9.0	0.5 - 4.0	41.5	25	25	7.0 - 13.0	7.0 - 13.0	-
1SNG622019R0000	EP-SIG-SZ25-LGR-A	7035	L.Grey	25.0	Double	25.2 - 25.4	36.3	24.9	9.0	0.5 - 4.0	43.5	29	29	8.0 - 17.0	11.0 - 17.0	8.0-11.0
1SNG622020R0000	EP-SIG-SZ25-GR-A	7001	Grey	25.0	Double	25.2 - 25.4	36.3	24.9	9.0	0.5 - 4.0	43.5	29	29	8.0 - 17.0	11.0 - 17.0	8.0-11.0
1SNG622021R0000	EP-SIG-SZ25-BL-A	9005	Black	25.0	Double	25.2 - 25.4	36.3	24.9	9.0	0.5 - 4.0	43.5	29	29	8.0 - 17.0	11.0 - 17.0	8.0-11.0
1SNG622022R0000	EP-SIG-SZ25-LGR-B	7035	L.Grey	25.0	Single	25.2 - 25.4	36.3	24.9	9.0	0.5 - 4.0	43.5	29	29	11.0 - 17.0	11.0 - 17.0	-
1SNG622023R0000	EP-SIG-SZ25-GR-B	7001	Grey	25.0	Single	25.2 - 25.4	36.3	24.9	9.0	0.5 - 4.0	43.5	29	29	11.0 - 17.0	11.0 - 17.0	-
1SNG622024R0000	EP-SIG-SZ25-BL-B	9005	Black	25.0	Single	25.2 - 25.4	36.3	24.9	9.0	0.5 - 4.0	43.5	29	29	11.0 - 17.0	11.0 - 17.0	-
1SNG622025R0000	EP-SIG-SZ32-LGR-A	7035	L.Grey	32.0	Double	32.2 - 32.4	43.2	31.9	9.0	0.5 - 4.0	49.5	36	36	11.0 - 21.0	15.0 - 21.0	11.0 - 15.0
1SNG622026R0000	EP-SIG-SZ32-GR-A	7001	Grey	32.0	Double	32.2 - 32.4	43.2	31.9	9.0	0.5 - 4.0	49.5	36	36	11.0 - 21.0	15.0 - 21.0	11.0 - 15.0
1SNG622027R0000	EP-SIG-SZ32-BL-A	9005	Black	32.0	Double	32.2 - 32.4	43.2	31.9	9.0	0.5 - 4.0	49.5	36	36	11.0 - 21.0	15.0 - 21.0	11.0 - 15.0
1SNG622028R0000	EP-SIG-SZ32-LGR-B	7035	L.Grey	32.0	Single	32.2 - 32.4	43.2	31.9	9.0	0.5 - 4.0	49.5	36	36	15.0 - 21.0	15.0 - 21.0	-
1SNG622029R0000	EP-SIG-SZ32-GR-B	7001	Grey	32.0	Single	32.2 - 32.4	43.2	31.9	9.0	0.5 - 4.0	49.5	36	36	15.0 - 21.0	15.0 - 21.0	-
1SNG622030R0000	EP-SIG-SZ32-BL-B	9005	Black	32.0	Single	32.2 - 32.4	43.2	31.9	9.0	0.5 - 4.0	49.5	36	36	15.0 - 21.0	15.0 - 21.0	-
1SNG622031R0000	EP-SIG-SZ40-LGR-A	7035	L.Grey	40.0	Double	40.2 - 40.4	55.2	39.9	13.2	0.5 - 4.0	56.0	46	46	16.0 - 28.0	19.0 - 28.0	16.0 - 19.0
1SNG622032R0000	EP-SIG-SZ40-GR-A	7001	Grey	40.0	Double	40.2 - 40.4	55.2	39.9	13.2	0.5 - 4.0	56.0	46	46	16.0 - 28.0	19.0 - 28.0	16.0 - 19.0
1SNG622033R0000	EP-SIG-SZ40-BL-A	9005	Black	40.0	Double	40.2 - 40.4	55.2	39.9	13.2	0.5 - 4.0	56.0	46	46	16.0 - 28.0	19.0 - 28.0	16.0 - 19.0
1SNG622034R0000	EP-SIG-SZ40-LGR-B	7035	L.Grey	40.0	Single	40.2 - 40.4	55.2	39.9	13.2	0.5 - 4.0	56.0	46	46	19.0 - 28.0	19.0 - 28.0	-
1SNG622035R0000	EP-SIG-SZ40-GR-B	7001	Grey	40.0	Single	40.2 - 40.4	55.2	39.9	13.2	0.5 - 4.0	56.0	46	46	19.0 - 28.0	19.0 - 28.0	-
1SNG622036R0000	EP-SIG-SZ40-BL-B	9005	Black	40.0	Single	40.2 - 40.4	55.2	39.9	13.2	0.5 - 4.0	56.0	46	46	19.0 - 28.0	19.0 - 28.0	-

REVISIONS

P	LTR	DESCRIPTION	DATE	DWN	APVD
	A	INITIAL REVISION	25MAR2022	KR	RM

NOTE:
The products with BMOSS code include silicone gasket and seal.

RPT	QTY	DOC TITLE	DRAWING NUMBER	MATERIAL	COMMENTS
9	1	CAP	-	PA6 V2	-
8	1	OUTER SEAL (S1)	-	CR. SILICONE	-
7	1	INNER SEAL (S2)	-	CR. SILICONE	-
6	1	PLUG IN INNER RING	-	PA6 V2	-
5	1	PLUG IN UPPER BODY WITH FLANGE	-	PA6 V2	-
4	1	PLUG IN TAB WASHER	-	PA66	-
3	1	PLUG IN FRICTION GASKET	-	CR. SILICONE	-
2	1	PLUG IN BOTTOM BODY WITH GUIDE	-	PA6 V2	-
1	1	ENCLOSURE	-	-	-

THIS DRAWING IS A CONTROLLED DOCUMENT.

DIMENSIONS: mm

TOLERANCES UNLESS OTHERWISE SPECIFIED:
0 PLC ±-
1 PLC ±1
2 PLC ±1
3 PLC ±1
4 PLC ±1
ANGLES ±-

MATERIAL: REF. TABLE
FINISH: -

DWN: Rajan n. Kasi 25MAR2022
CHK: Rafeeq, Mohd 25MAR2022
APVD: Rafeeq, Mohd 25MAR2022
PRODUCT SPEC: SNAP-IN-GLAND-PA
APPLICATION SPEC: -
WEIGHT: -

TE Connectivity

NAME: SNAP-IN-GLAND-PA

SIZE	CAGE CODE	DRAWING NO	RESTRICTED TO
A1	00779	C-1SNP061373-0100	-

CUSTOMER DRAWING | SCALE 4:1 | SHEET 2 OF 2 | REV A1

4805 (3/13)

Downloaded from Arrow.com.