DIALIGHT PART NO.	LED COLOR
598-2L01-107F	WHITE (X=0.27,Y=0.25)
598-2L01-102F	
598-2L00-107F	WHITE (X=0.19,Y=0.21)
598-2L00-102F	

NOTES:
1. PIN NUMBERS ARE FOR REFERENCE ONLY, DESIGNATION NON-EXISTENT ON PART.
2. LABELING FOR REEL AND OUTSIDE OF ALUMINUM BAG, DIALIGHT P/N, QUANTITY PER REEL, DATE CODE, INTENSITY BIN CODE, LOT NUMBER AND COUNTRY OF ORIGIN.
3. THIS PRODUCT IS RoHS COMPLIANT. EACH BAG IS TO BE MARKED WITH RoHS COMPLIANT LABEL OR EQUIVALENT MARKINGS. LED MUST BE Pb FREE.
4. MOISTURE SENSITIVITY LEVEL 3.
5. QUANTITY : PART NUMBERS END WITH 107F REFER AS 4000 PCS/ REEL
PART NUMBERS END WITH 102F REFER AS 20 PCS/ STRIP

REV	ECN NO	REVISIONS	DRN	CKD	APP	DATE
A	106343	NEW RELEASE	JSG	CS	NO	02JUN23

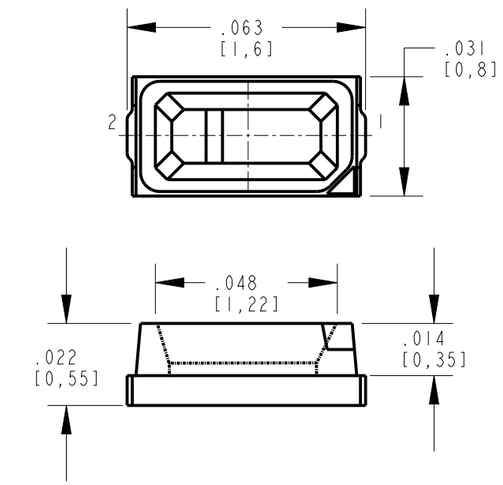

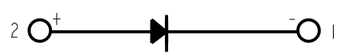

LED SCHEMATIC

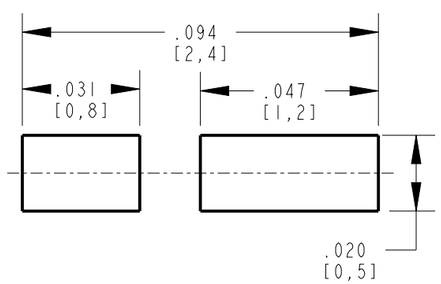

RECOMMENDED SOLDER PAD LAYOUT

Carrier Tape Dimension

TAPING SPECIFICATIONS

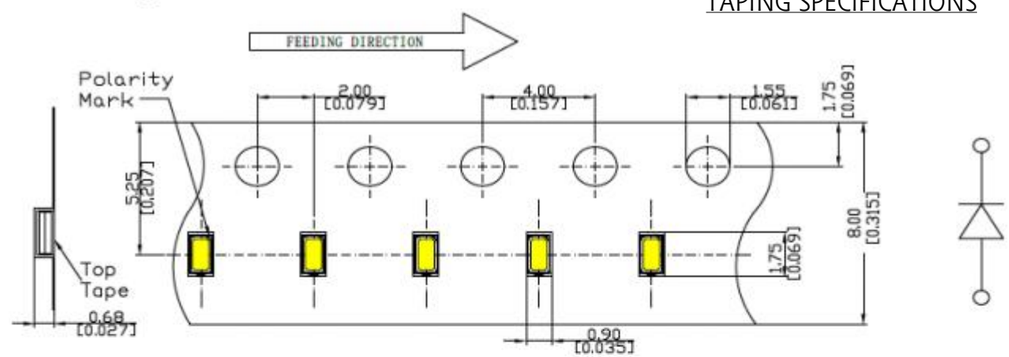

TOLERANCE (UNLESS OTHERWISE SPECIFIED): ±0.003(±0.1mm)

Reel Dimension

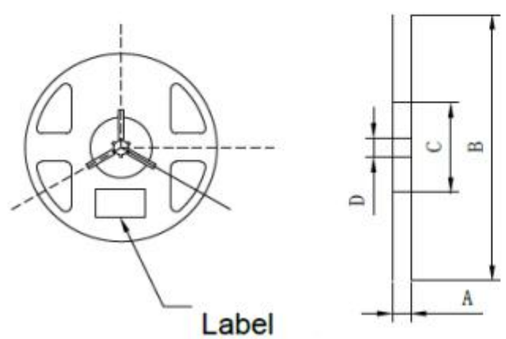

A	8.0±0.1mm
B	178±1mm
C	60±1mm
D	13.0±0.5mm

RECOMMENDED RoHS SOLDER PROFILE

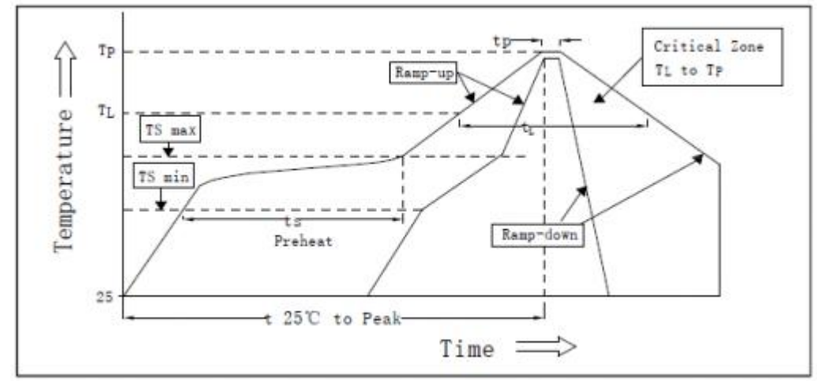

MARK	DEFINITION	CONDITION
TS_{max}	MAXIMUM OF PRE-HEATING TEMPERATURE	200°C
TS_{min}	MINIMUM OF PRE-HEATING TEMPERATURE	150°C
T_s	TIME FORM Tsmin To Tsmax	60s-120s
T_L	REFERENCE TEMPERATURE	217°C
t_L	RETENTION TIME FOR T_L	60s-150s
T_P	PEAK TEMPERATURE	260°C
t_P	TIME FOR PEAK TEMPERATURE	WITHIN 10s
DTr/Dt	TEMPERATURE RISING RATE	WITHIN 3°C/sec
DTd/Dt	TEMPERATURE DECREASING RATE	WITHIN 6°C/sec

ATTENTION:
OBSERVE PRECAUTIONS FOR HANDLING ELECTROSTATIC SENSITIVE DEVICES

ABSOLUTE MAXIMUM RATINGS AT 25°C

LED COLOR (mcd)	POWER DISSIPATON (mW)	FORWARD CURRENT (mA)	PEAK FORWARD CURRENT (mA)	OPERATING TEMPRATURE (°C)	STORAGE TEMPRATURE (°C)	DERATING CURVE FROM 25°C (mA/°C)	ELECTROSTATIC DISCHARGE (V)
WHITE(1200-2800)	108	30	60 1/10 DUTY CYCLE, 0.1ms PULSE WIDTH	-40°C TO +85°C	-40°C TO +85°C	.333	1000
WHITE(150-800)	68	20		-40°C TO +85°C	-40°C TO +85°C	.250	1000

OPERATING CHARACTERISTICS AT 25°C AMBIENT

LED COLOR (mcd)	TEST CONDITION (mA)	LUMINOUS INTENSITY (mcd)		FORWARD VOLTAGE (V)		CHROMATICITY COORDINATES (CALCULATED)	REVERSE CURRENT (uA)	VIEWING ANGLE (DEGREES)	THERMAL RESISTANCE °C/W
	TYP	MIN	MAX	MIN	MAX	TYP	MAX	TYP	MAX
WHITE(1200-2800)	20mA	1200	2800	2.8	3.6	X=0.270 Y=0.256	10μA @ VR=5V/10ms	140	450
WHITE(150-800)	5mA	150	800	2.6	3.4	X=0.194 Y=0.212		140	450

THIS DRAWING AND THE CONTENTS HEREIN ARE CONFIDENTIAL AND THE SOLE PROPERTY OF DIALIGHT CORP. REPRODUCTION OF THIS DRAWING OR CONSTRUCTION OF ANY PARTS WITHIN THIS DRAWING ARE FORBIDDEN WITHOUT THE WRITTEN CONSENT OF DIALIGHT CORP.

DIALIGHT CORP INTERNAL REFERENCE ONLY : 3D MODEL : 450052186 2X23- .1

SCALE: 25.000
ALL DIM's: INCH (mm)
TOLERANCES: UNLESS OTHERWISE SPECIFIED
FRACTIONS: ±1/64
DECIMALS (.XX): ±.01
DECIMALS (.XXX): ±.005
DECIMALS (.XXXX): ±.0005
ANGLES: ±1°
FINISH
FSCM 83330

DRAWING NUMBER: C-18685
REV: A
TITLE: SM 0603 WHT W REFLECTOR
MATERIAL

Dialight
1501 ROUTE 34 SOUTH
FARMINGDALE, NJ 07727
(732) 919-3119
www.dialight.com

SHEET 1 OF 1
FAMILY TABLE:

Downloaded from Arrow.com.