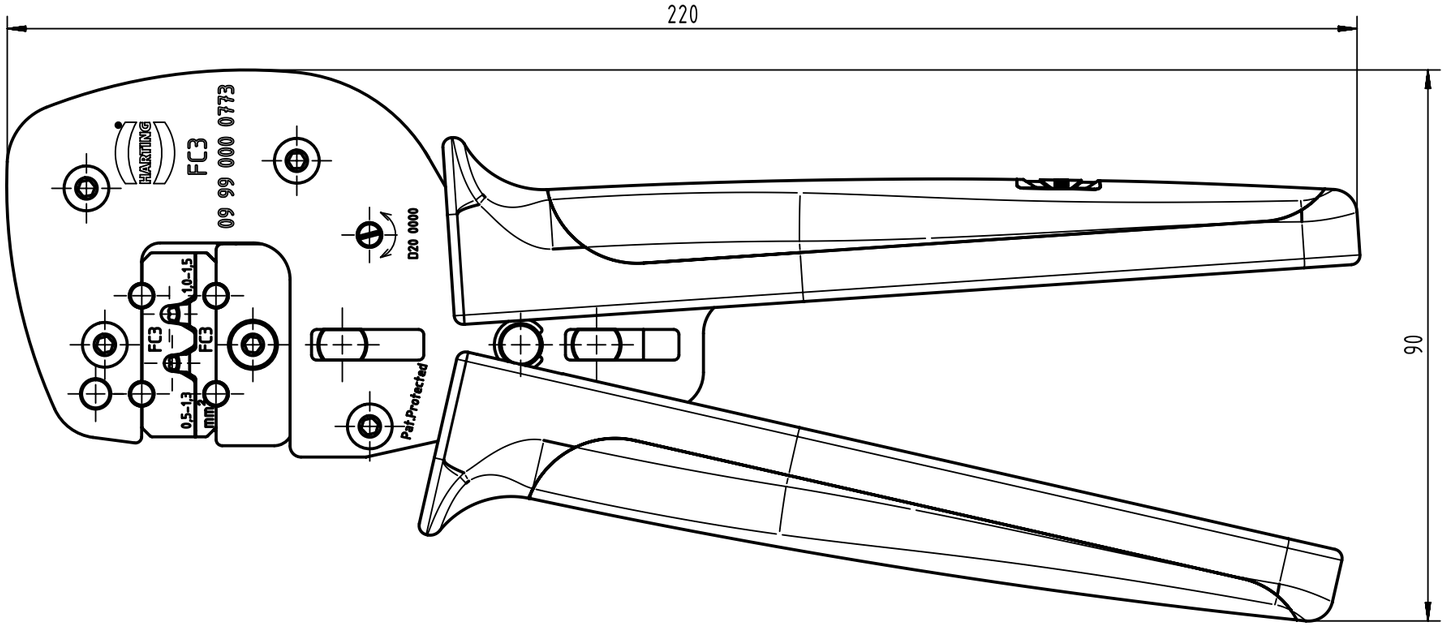

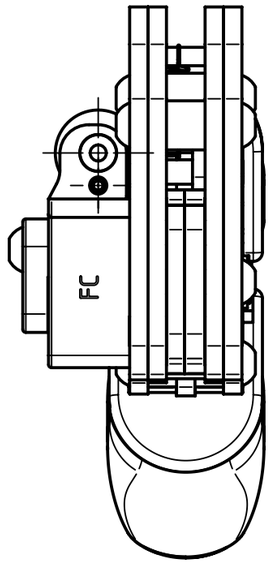

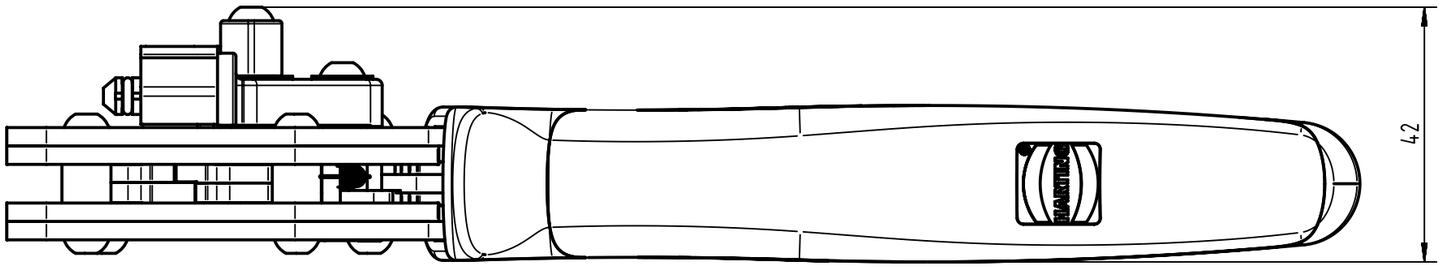

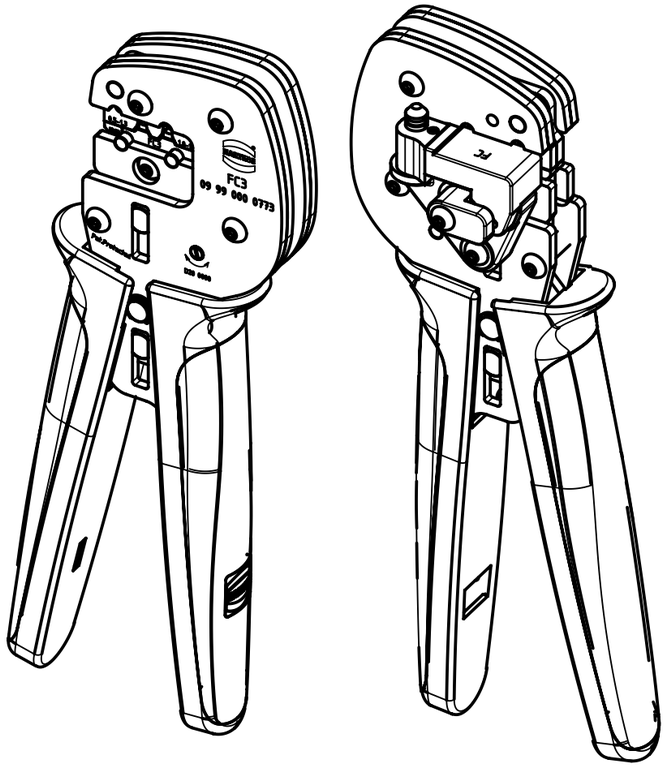

- easy handling
- straight action principle
- ratchet release
- contact positioning with flap locator type FC
- precisely ground profiles
- burnished surface
- ergonomically formed soft grips
  colour: rape yellow/signal black
- fully recyclable; RoHS complained
- application range: FC3 contacts
  wire gauge: profile 1: 0,5-1,3mm²
  profile 2: 1,0-1,5mm²
- weight approx. 610 g

for FC3 crimp contacts:					
09 06 000 9572	male	2	0,5-1,5	20-16	1,6-2,8
09 06 000 9552	male	1	0,5-1,5	20-16	1,6-2,8
09 06 000 8482	female	2	0,5-1,5	20-16	1,6-2,8
09 06 000 8472	female	1	0,5-1,5	20-16	1,6-2,8
09 06 000 6462	female	Sn	0,5-1,5	20-16	1,6-2,8
contact no.	male / female	PL	wire gauge	AWG	Insulation∅

All Dimensions in mm
Original Size DIN A3

Scale 1:1 | Free size tol. | Ref. | Sub.

All rights reserved

Department EL PD

HARTING Electronics GmbH
D-32339 Espelkamp

Created by	Inspected by	Standardisation	Date	State
WAERMKER	HAERTLING	HOFFMANN	2020-05-07	Final Release

Title: Crimpset FC3

Doc-Key / ECM-Nr.: 100888551/UGD/000/A 500000172513

Type: TB | Number: 09990000773 | Rev.: A | Page: 1/1

A3

Downloaded from Arrow.com.