MICRO SWITCH
FREEPORT ILLINOIS U S A
A DIVISION OF HONEYWELL
FED MFG. CODE 91929

SWITCH-BASIC

CATALOG LISTING
1HM19

Ⓐ MILITARY STANDARD MS-27216-1

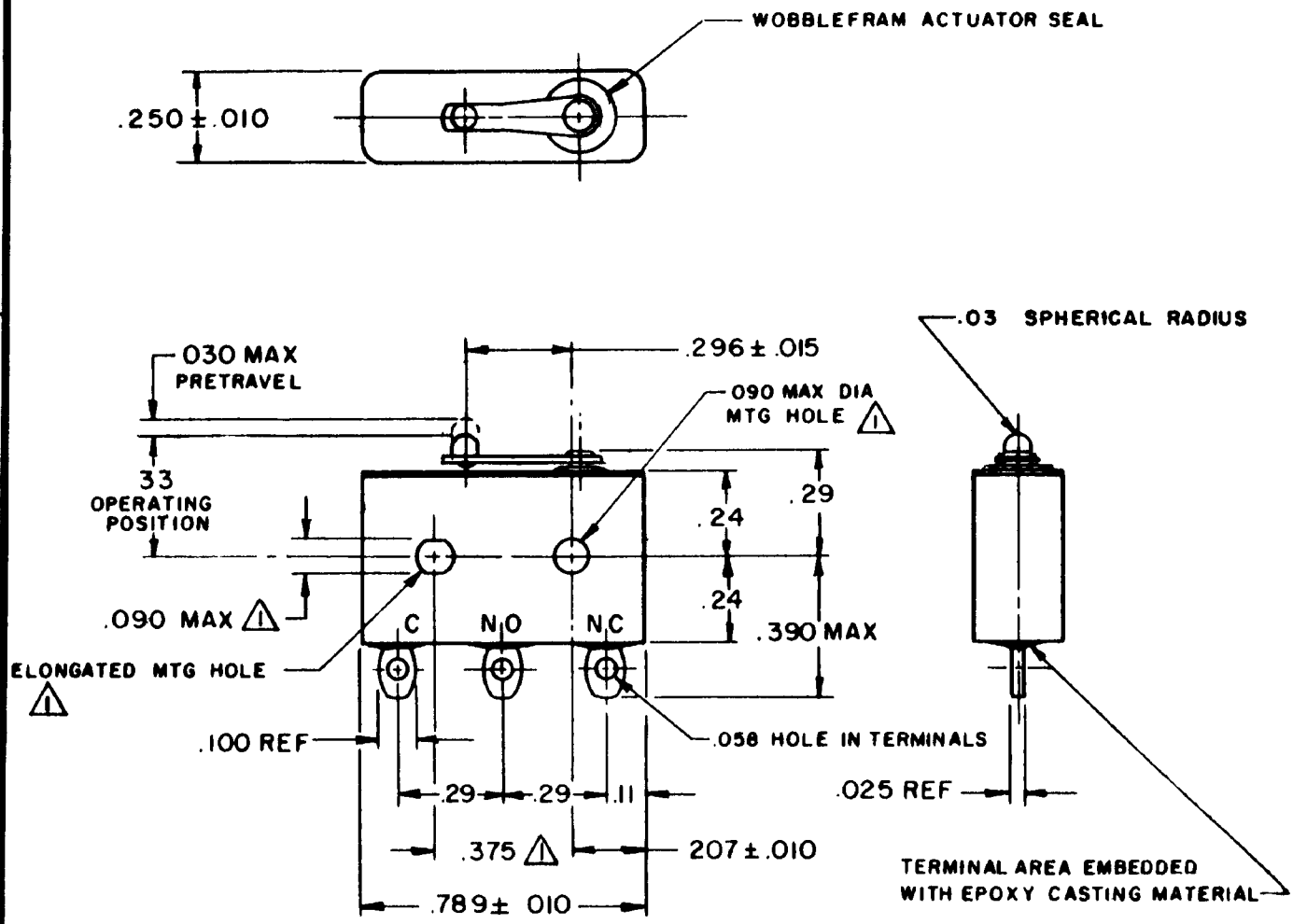

NOTE –
⚠1 – MOUNTING HOLES WILL ACCEPT PINS OR SCREWS OF .087 MAX DIA ON .375 ± 002 CENTERS
2 – FOR USE IN TEMPERATURE RANGE – 85° F. TO 257° F.
3 – HERMETICALLY SEALED (METAL – TO – METAL, GLASS – TO – METAL)
4 – ALL EXPOSED PARTS ARE OF CORROSION RESISTANT MATERIALS
5 – TERMINALS ARE TINNED FOR SOLDERING
6 – DO NOT APPLY MORE THAN 1 1/2 INCH-POUNDS OF TORQUE WHEN TIGHTENING MOUNTING SCREWS

THIS DRAWING COVERS A PROPRIETARY ITEM AND IS THE PROPERTY OF MICRO SWITCH, A DIVISION OF HONEYWELL. THIS DRAWING IS NOT TO BE COPIED OR USED WITHOUT THE APPROVAL OF MICRO SWITCH.

CHARACTERISTICS

OPERATING FORCE ———— 7 OZ MAX
RELEASE FORCE ———— 1 OZ MIN
DIFFERENTIAL TRAVEL ——— .006 MAX
OVERTRAVEL ———— .003 MIN

ELECTRICAL DATA

CONTACT ARRANGEMENT
S P D T

LOAD	SEA LEVEL		70,000FT
	28 VDC	115 VAC, 400CPS	28 VDC
RESISTIVE	4 AMP	2 AMP	4 AMP
INDUCTIVE	2 AMP	2 AMP	2 AMP
LAMP	1 AMP	.5 AMP	1 AMP

SCALE 2 TO 1
DO NOT SCALE PRINT

UNLESS OTHERWISE NOTED
DIMENSIONS ARE IN INCHES
TOLERANCES ARE:

ONE PLACE	(.0)	±.030
TWO PLACE	(.00)	±.015
THREE PLACE	(.000)	±.005
ANGLES		±

WEIGHT .014 LB MAX

M 1HM19
DRAWING NUMBER
ISSUE X 5
REPLACES
RELEASE NO. PR-291
CHECK

REVISIONS
A C025847 OMW 16 MAY 69
B C0-32230 BEN 24 JUL 73
C C071228 DAW 1 NOV 91
D C062904 DLT 17 MAY 96

CHECK
14 AUG 68
LSD
CHECK
12 AUG 68
DRAWN GFS
FO-50378-1A

Downloaded from Arrow.com.