5

MICRO SWITCH
A DIVISION OF MINNEAPOLIS-HONEYWELL REGULATOR COMPANY
FREEPORT, ILLINOIS
FED. MFR. CODE 91929

PACKET

CATALOG LISTING
8PA42

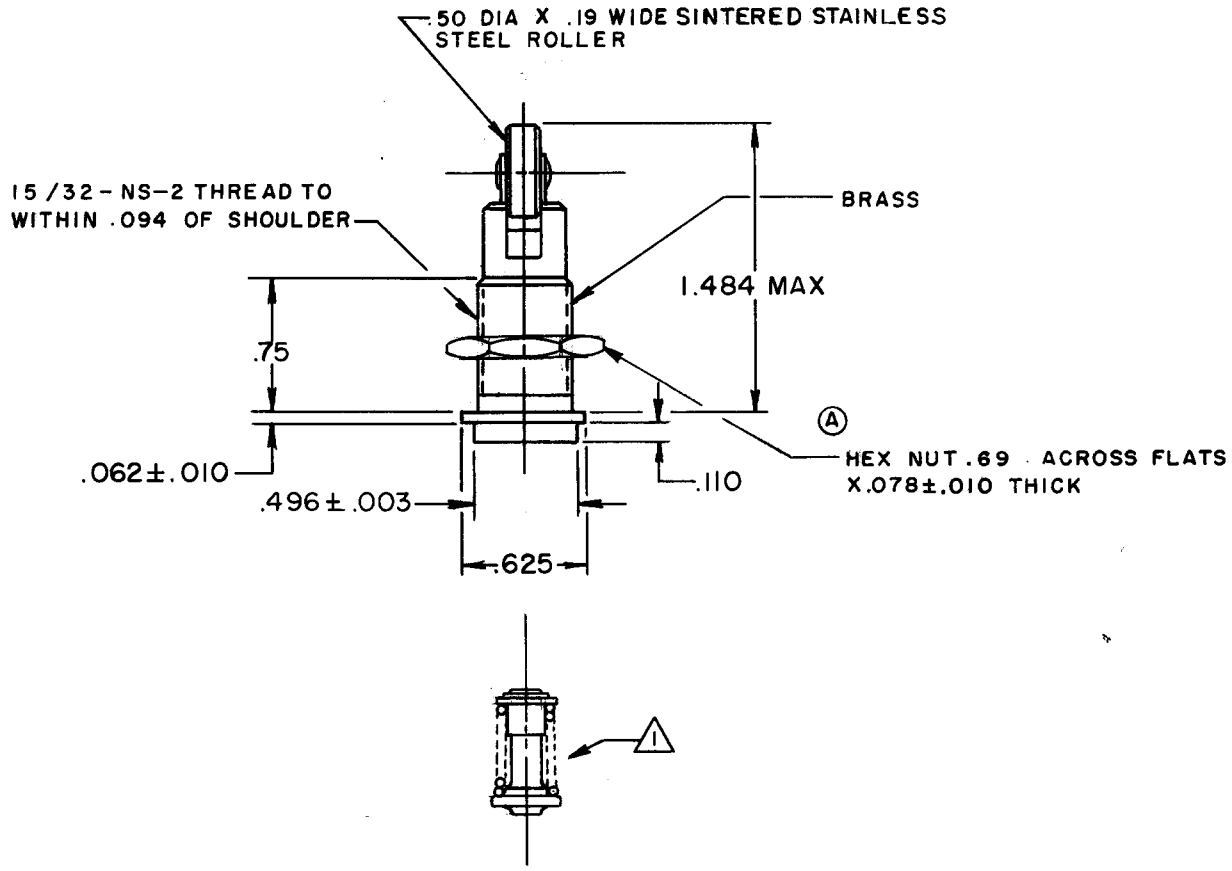

NOTE -
1 — OVERTRAVEL ASSEMBLY FURNISHED UNASSEMBLED FROM BUSHING ASSEMBLY

THIS DRAWING COVERS A PROPRIETARY ITEM AND IS THE PROPERTY OF MICRO SWITCH, A DIVISION OF MINNEAPOLIS-HONEYWELL REGULATOR CO. THIS DRAWING IS NOT TO BE COPIED OR USED WITHOUT THE APPROVAL OF MICRO SWITCH.

CHARACTERISTICS	ELECTRICAL DATA		SCALE FULL
	CONTACT ARRANGEMENT	BREAK DISTANCE	DO NOT SCALE PRINT
			UNLESS OTHERWISE SPECIFIED DIMENSIONS ARE IN INCHES
			TOLERANCES ARE:
			ONE PLACE (.0) ±.030
			TWO PLACE (.00) ±.015
			THREE PLACE (.000) ±.005
			ANGLES ±
			WEIGHT

SKETCH 33114
ISSUE 1
REPLACES
RELEASE NO. SR 9943
DRAWING NUMBER M 8PA42
ISSUE X 2 4
CHECK GCH 14 NOV 61
CHECK FWF 6 SEPT '61
CHECK DAW 6 SEPT '61
CHECK
DRAWN LSD 31 AUG 61

REVISIONS
A CO17213 MBF 31 JULY 62
B CO-77426C SAD 20 JUL 94
C CO79303 SAD 9 MAR 95

FO-50378

Downloaded from Arrow.com.