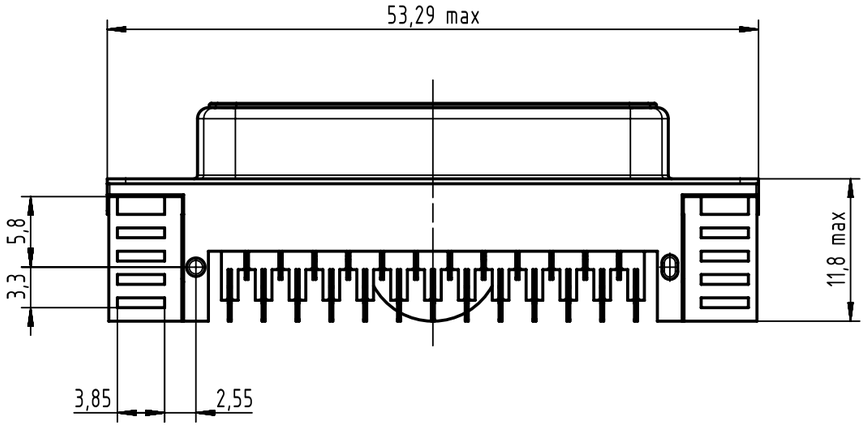

PCB layout, component side (thickness 1,6 min)

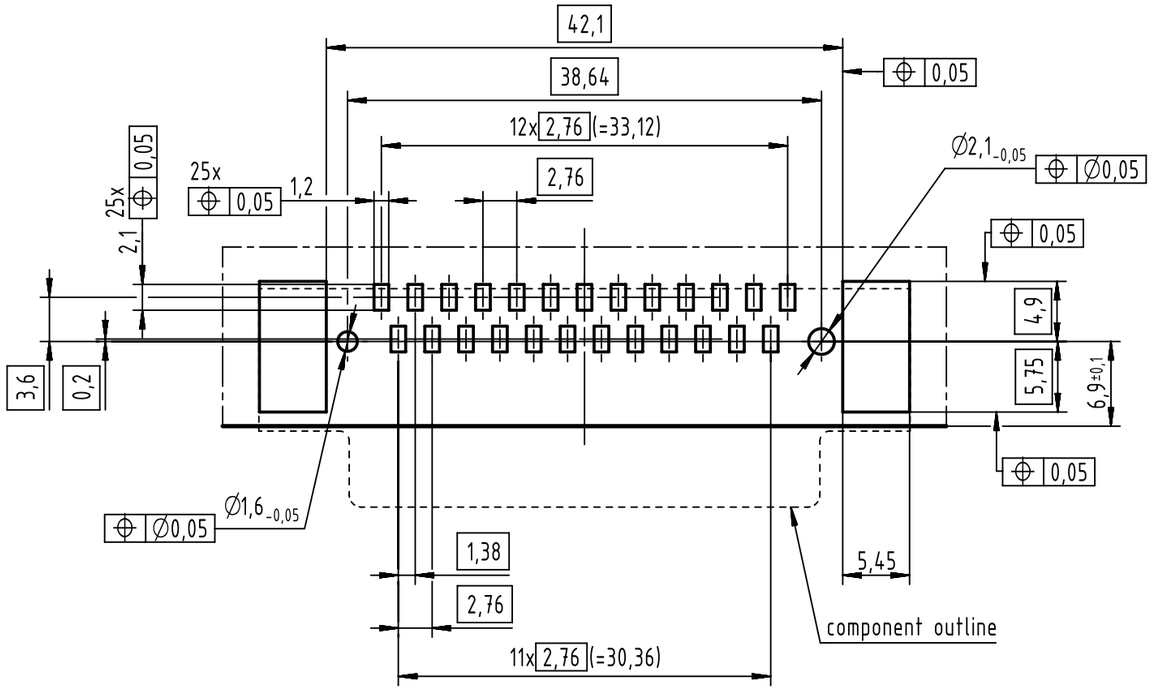

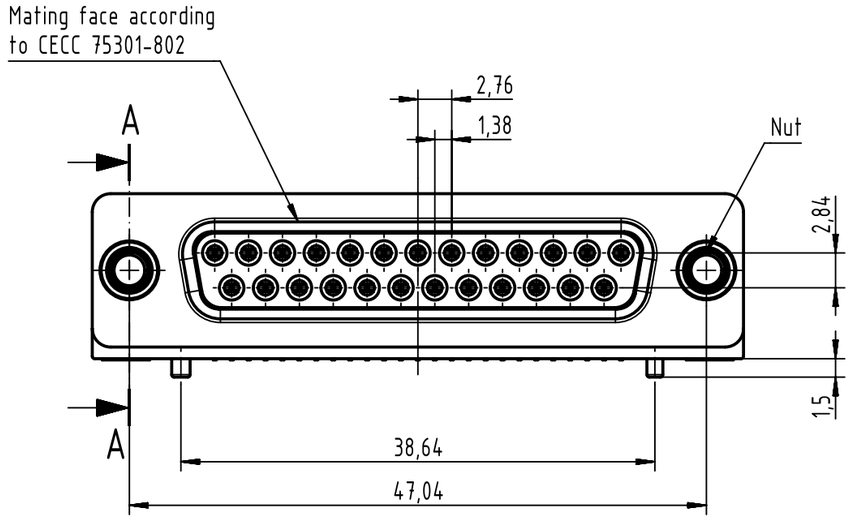

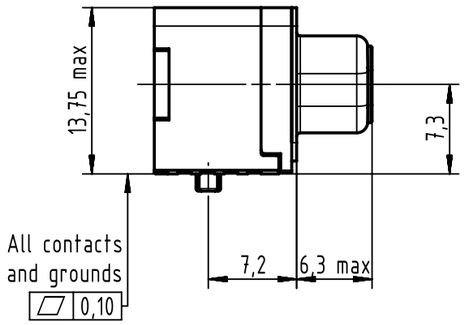

A-A

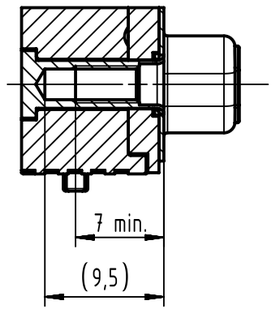

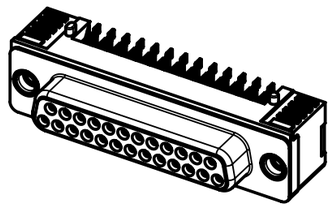

Max. Temperature: 260°C during 10 seconds.
Find further technical information on DS 09550200301.

Part number	PL	Nut	Index designation	
0955 356 6612 333	2	4-40 UNC	Black insulator	Samples
0955 356 3612 741	1			Reel packaging (140 connectors)
0955 356 6612 741	2			
0955 356 7612 741	3			
0955 356 3611 741	1	M3		
0955 356 6611 741	2			
0955 356 7611 741	3			

All Dimensions in mm
Original Size DIN A3

Scale 2:1 | Free size tol. | Ref. | Sub.

All rights reserved

Department EL PD

Created by ZHUANGJ | Inspected by LUOK | Standardisation HOFFMANN | Date 2018-11-16 | State Final Release

Title: D-Sub angled standard SMT 25-pole female ass with screw nut

Doc-Key / ECM-Nr. 100512305/UGD/001/C 500000141375

HARTING Electronics GmbH
D-32339 Espelkamp

Type TB | Number 0955356X61X | Rev. C | Page 1/1

A3

Downloaded from Arrow.com.