DWG STATUS						ZONE	REVISION HISTORY	AUTH	DR	APVD 1	APVD 2
DATE	STG	REV	N/P	CHG							
29N019	R	01					INITIAL RELEASE		S.SEL	M.EVE	J.FAB
20DE20	R	01	AA				PART REVISION ADDED		S.SEL	M.EVE	J.FAB

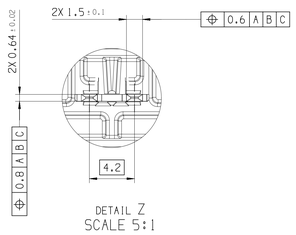

DETAIL Z
SCALE 5:1

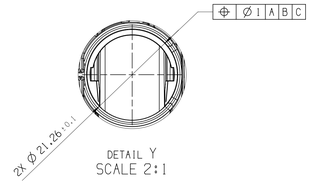

DETAIL Y
SCALE 2:1

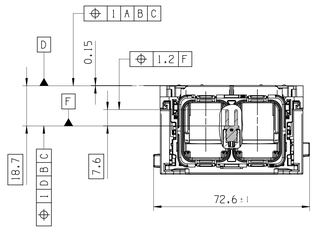

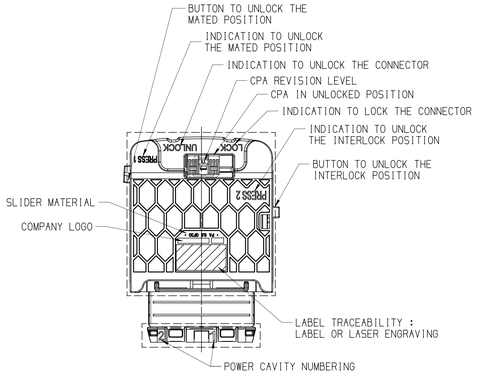

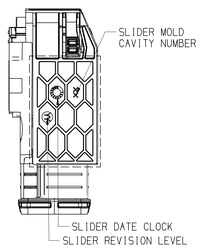

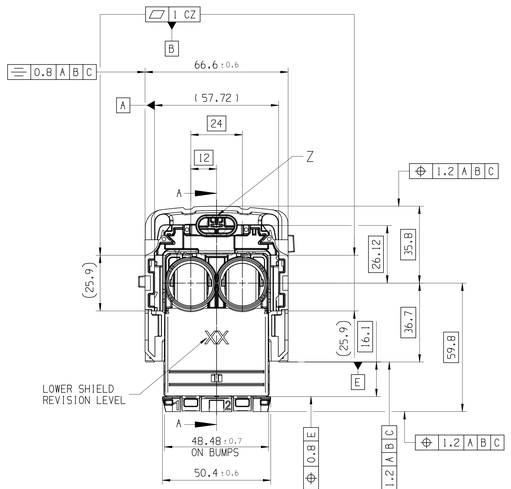

LOCAL SECTION A-A

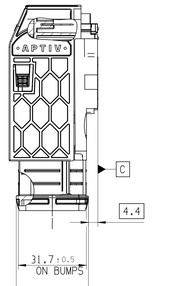

ASSOCIATED PARTS (FOR INFORMATION)					
DESIGNATION	APTIV P/N	SIZE mm2	EXTERNAL INSULATION WIRE DIAMETER	REAR SEAL DEVICE	
				APTIV P/N	SWS COLOR
SILVER RCS890 FEMALE TERMINAL	33522586	SEE DRAWING 33521619			
HALF SHIELDING BRAID CLAMP	35091447				

KEY				
	CLASSIFICATION	HIGH POWER: MORE THAN 60V	LOW POWER: LESS THAN 60V	HIGH POWER: MORE THAN 60V
	MAIN COLOR OF THE PRODUCT	ORANGE	BLUE	ORANGE
	APTIV PART-N°	35092244	35368903	35092239
	APTIV REV-N°	01	01	01
	IMDS ID	703682755	887595513	703692073
	WEIGHT (±5%)	0.120 kg		0.120 kg
	MECHANICAL KEY = OUTER HOUSING PLUG	KEY 1 (BLACK)		KEY 2 (BROWN)
	FOLLOWING FRONT VIEW SCALE 1:1	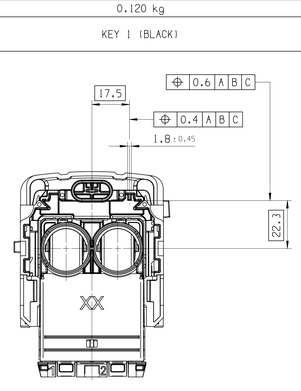		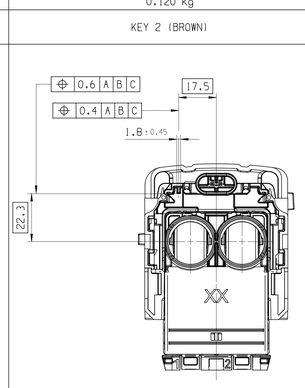

01AA

3D VIEW

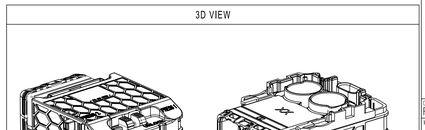

SCALE 3:4

LINE DRAWN THROUGH A PART NUMBER INDICATES THAT PHYSICAL PARTS ARE NOT AVAILABLE FOR ORDERING.

PART NUMBERS THAT DO NOT HAVE A LINE PRESENT INDICATE THAT PHYSICAL PARTS ARE AVAILABLE FOR ORDERING.

CONTACT APTIV SALES TO ASSURE AVAILABILITY OF PARTS.

LA LIGNE TRACÉE SUR LA RÉFÉRENCE PIÈCE INDIQUE QUE LA PIÈCE N'EST PAS DISPONIBLE À LA COMMANDE

LES RÉFÉRENCES PIÈCES QUI NE SONT PAS BARRÉES INDIQUENT QUE CELLES-CI SONT DISPONIBLES PHYSIQUEMENT POUR ÊTRE COMMANDÉES

CONTACTER LE SERVICE COMMERCIAL DE APTIV POUR S'ASSURER DE LA DISPONIBILITÉ DES PIÈCES

R 0.1 MAX
R 0.2 MAX
SHARP CORNER TOLERANCE

DIM TO CHECK COTES A VERIFIER / I DIM FOR HELP COTES POUR INFO / THEORETIC DIM COTES THEORIQUES	DIMENSIONAL RANGE (MM)				CHART E.
	FROM	0	> 20	> 30	> 70	> 100
	TO	20	30	70	100	> 100
	TOLERANCE UNLESS OTHERWISE SPECIFIED				
	±0.15	±0.2	±0.3	±0.4	±0.5
	ANGULAR TOLERANCE ±2°				

DWG TYP
PART DRAWING

WEIGHT (GR)
VOLUME (CM³)
ROUTING
DISTR CODE
D

UNLESS OTHERWISE SPECIFIED

GENERAL TOLERANCES ACCORDING TO:

GD&T ACCORDING TO:

REFERENCE

FIRST ANGLE PROJECTION

DO NOT SCALE

USE MATH DATA

NX

APTIV

CONNECTION SYSTEMS
Chennai, India

COPYRIGHT 2019 APTIV. ALL RIGHTS RESERVED.

THIS DRAWING IS THE PROPERTY OF APTIV AND CONTAINS APTIV CONFIDENTIAL INFORMATION. THE REPRODUCTION, DISTRIBUTION AND UTILIZATION OF THIS DOCUMENT OR ITS RELATED CAD MATH DATA, AS WELL AS COMMUNICATION OF ANY CONTENT TO OTHERS, WITHOUT EXPRESS AUTHORIZATION, IS PROHIBITED.

CE PLAN EST LE PROPRIETE DE APTIV ET CONTIENT DES INFORMATIONS APTIV CONFIDENTIELLES LA REPRODUCTION, LA DISTRIBUTION ET L'UTILISATION DE CE DOCUMENT OU DE SES DONNÉES MATHÉMATIQUES CAO, AINSI QUE LA COMMUNICATION DE TOUT CONTENU À AUTRUI, SANS AUTORISATION EXPRESSE EST INTERDITE

		DATE
DR	S.SELVAKUMARAN	29N019
APVD1	M.EVEZARD	29N019
APVD2	J.FABRE	29N019
APVD3		
APVD4		
APVD5		

SUBSTANCES OF CONCERN AND RECYCLED CONTENT PER APTIV 10949001
MATIERES PRIORITES ET CONTENU RECYCLABLE SELON APTIV 10949001

MATERIAL

DRAWING NAME
2W RCS890 RV FEMALE CONNECTOR SERIAL PHASE

DRAWING NUMBER
35111059

SIZE	SCALE	FRAME NO	SHEET NO	STG	REV	N/P
A0	1:1	1 OF 1	1 OF 2	R	01	AA

Downloaded from Arrow.com.