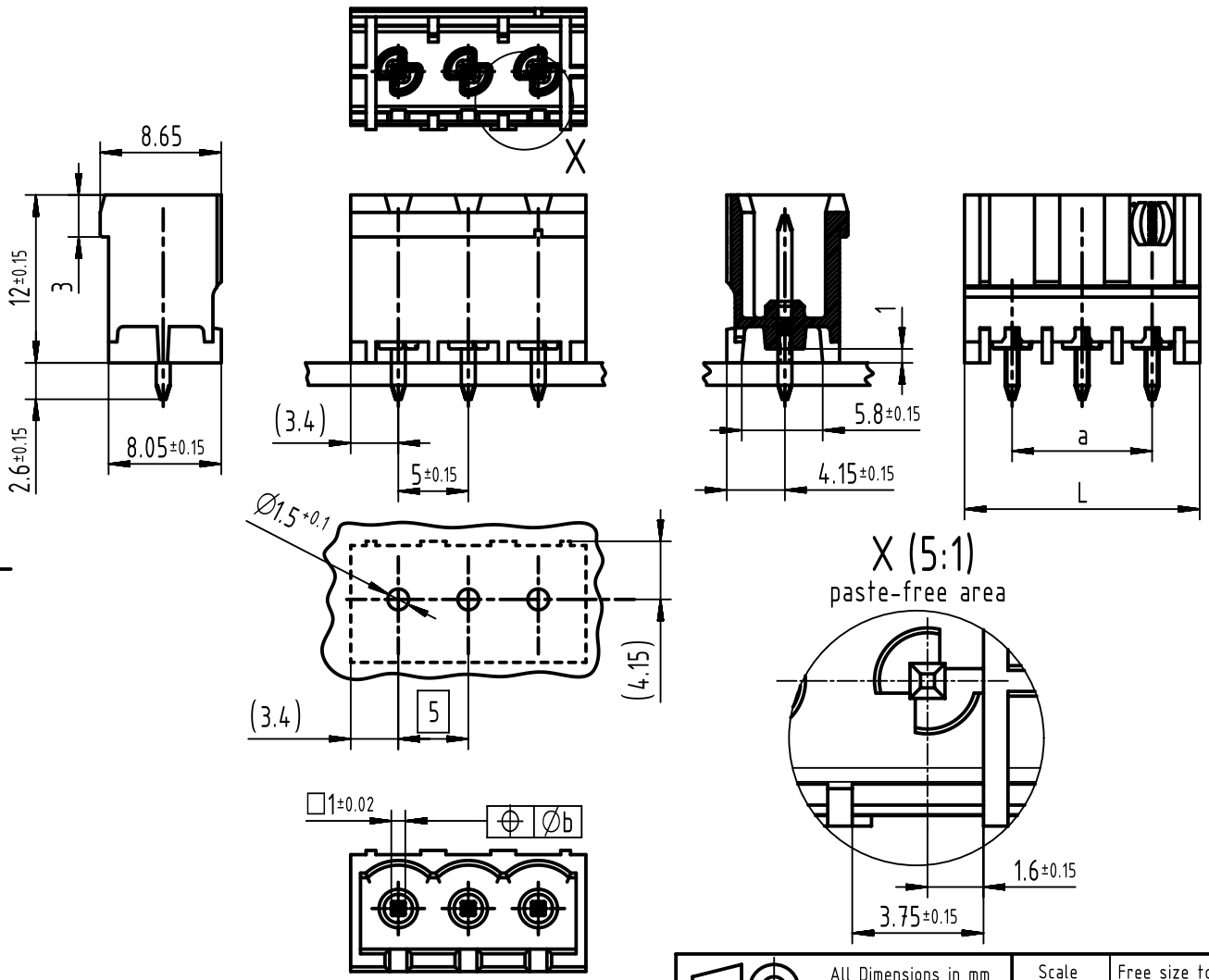

part-number	Poles	Dim. a	Tolerance	Dim. L	Tolerance	Dim. b
14120216001XXX	2	5	± 0.05	11.8	± 0.10	0.3
14120316001XXX	3	10	± 0.10	16.8		
14120416001XXX	4	15		21.8		
14120516001XXX	5	20		26.8		
14120616001XXX	6	25	± 0.15	31.8	± 0.15	
14120716001XXX	7	30		36.8		
14120816001XXX	8	35		41.8		
14120916001XXX	9	40		46.8		
14121016001XXX	10	45	± 0.20	51.8	± 0.20	
14121116001XXX	11	50		56.8		
14121216001XXX	12	55		61.8		
14121316001XXX	13	60	± 0.25	66.8	± 0.25	
14121416001XXX	14	65		71.8		
14121516001XXX	15	70		76.8		
14121616001XXX	16	75		81.8		
14121716001XXX	17	80	± 0.30	86.8	± 0.30	
14121816001XXX	18	85		91.8		
14121916001XXX	19	90		96.8		
14122016001XXX	20	95		101.8		

further information see: DS 14121400201

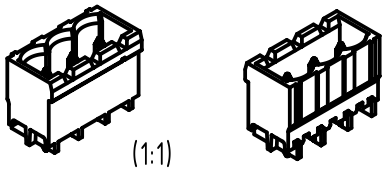

All Dimensions in mm
Original Size DIN A4

Scale 2:1

Free size tol.

Ref.

Sub.

All rights reserved

Department EC PD - DE

HARTING Electronics GmbH
D-32339 Espelkamp

Created by	Inspected by	Standardisation	Date	State
STORCK	TADJE	KOHLER	2016-03-16	Final Release

Title: har-flexicon 5.00 MTV-XX TB BK

Doc-Key / ECM-Nr.
100529534/UGD/001/H
500000101867

Type: TB

Number: 1412XX16001000

Rev.: H

Page: 1/1

A4

Downloaded from Arrow.com.