Tab Contacts

Tab 5,2 x 0.63 mm, Mates with Power Quadlok

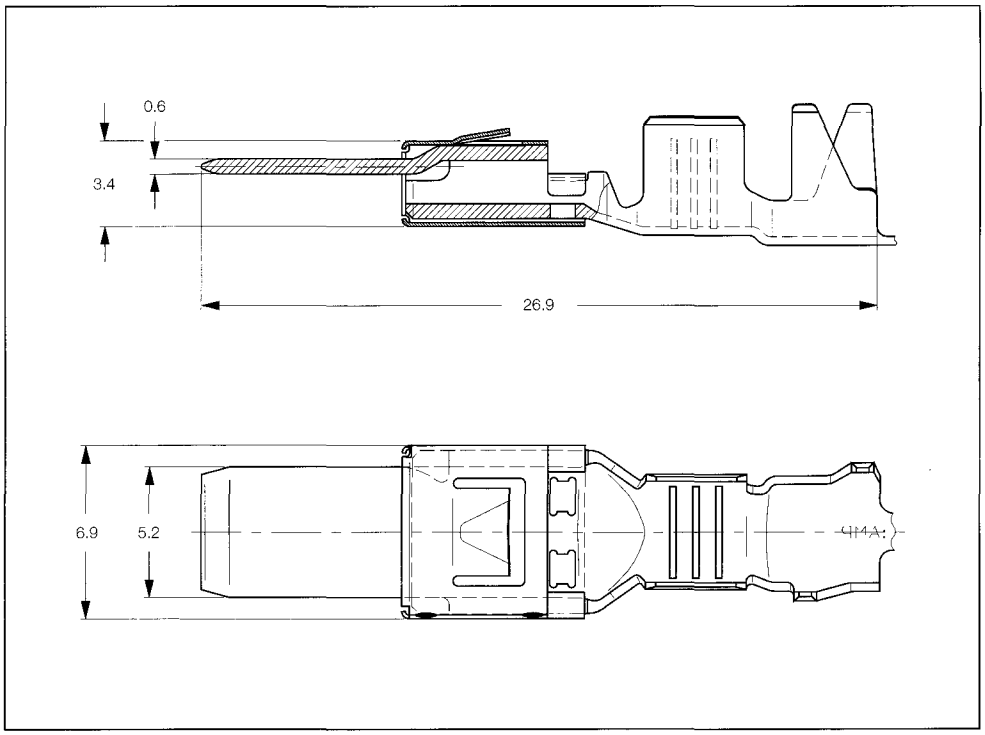

Standard Tab Contacts

Wire Size Range (mm^2)	Insulation Diameter		Material and Finish	Part Numbers						Hand Tool 354940-1 with Die Set
	FLK (mm)	FLR (mm)		Strip Form	Package Quantity	Loose-Piece	Package Quantity	Applicator Standard	Applicator Fine Adjust	
>1.0–2.5	–	2.2–3.0	pre-tin plated	968131-2*	3,000	929207-2	500	–	1528215	58593-2
				1241614-2**	3,000	1241644-2	500			
>2.5–4.0	–	3.4–3.7	pre-tin plated	968132-2*	2,300	929208-2	500	1426313	1528319	58594-2
				1241615-2**	2,300	1241645-2	500			

* "Pitch 7" Version
** "Pitch 6" Version

Single Wire Sealing System

Wire Size Range (mm^2)	Insulation Diameter		Material and Finish	Part Numbers						Hand Tool 354940-1 with Die Set
	FLK (mm)	FLR (mm)		Strip Form	Package Quantity	Loose-Piece	Package Quantity	Applicator Standard	Applicator Fine Adjust	
>1.0–2.5	–	2.2–3.0	pre-tin plated	968133-2	2,000	929209-2	500	–	1528356	58595-2
>2.5–4.0	–	3.4–3.7	pre-tin plated	968134-2	2,000	929210-2	500	–	1528357	58596-2

Downloaded from Arrow.com.