Overview

The R66 is constructed of metallized polyester film (wound or stacked technology) with radial leads of tinned wire. Radial leads are electrically welded to the contact metal layer on the ends of the capacitor winding. The capacitor is encapsulated with thermosetting resin in a box of material meeting the UL 94 V–0 requirements.

Automotive grade devices meet the demanding Automotive Electronics Council's AEC–Q200 qualification requirements.

Applications

Typical applications include blocking, coupling, decoupling, bypassing, and interference suppression in low voltage applications such as automotive. Not suitable for across-the-line application (see Suppressor Capacitors).

Benefits

- Voltage range: 50 – 630 VDC
- Capacitance range: 0.001 – 4.7 µF
- Lead Spacing: 7.5 mm
- Capacitance tolerance: ±5%, ±10%, ±20%
- Climatic category: 55/105/56
- Operating temperature range of −55°C to +105°C
- RoHS compliance and lead (Pb)-free terminations
- Tape & Reel packaging in accordance with IEC 60286–2
- Self-healing
- Automotive grade (AEC–Q200)

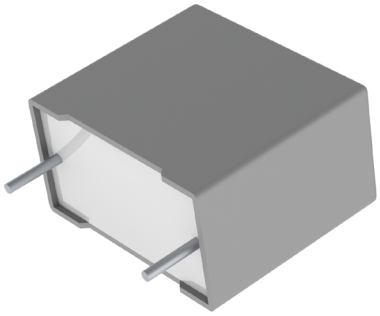

Part Number System

R66	E	D	3100	AA	7A	J
Series	Rated Voltage (VDC)	Length (mm)	Capacitance Code (pF)	Packaging	Internal Use	Capacitance Tolerance
Metallized Polyester	C = 50 D = 63 E = 100 I = 250 M = 400 P = 630	D = 7.5	The last three digits represent significant figures. First digit specifies the number of zeros to be added.	See Ordering Options Table	10 6A 7A	J = ±5% K = ±10% M = ±20%

Downloaded from Arrow.com.

Ordering Options Table

Lead Spacing Nominal (mm)	Type of Leads and Packaging	LL Lead Length (mm)	Lead and Packaging Code
7.5	**Standard Lead and Packaging Options**		
	Bulk – Short Leads	4 +2/−0	AA
	Ammo Pack in Taping Style Figure 1	H_0=18.5 ±0.5	DQ
	Ammo Pack in Taping Style Figure 2	H_0=18.5 ±0.5	28
	Other Lead and Packaging Options		
	Tape & Reel (Standard Reel Ø 355 mm)	H_0= 18.5 ±0.5	CK
	Bulk – Short Leads	2.7 +0.5/−0	JA
	Bulk – Short Leads	3.5 +0.5/−0	JB
	Bulk – Short Leads	10 ±1	JC
	Bulk – Short Leads	3.2 +0.3/−0.2	JH
	Bulk – Long Leads	17 +1/−2	Z3

Dimensions – Millimeters

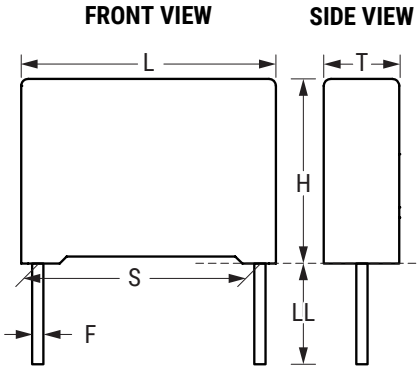

S		T		H		L		F	
Nominal	Tolerance	Nominal	Tolerance	Nominal	Tolerance	Nominal	Tolerance	Nominal	Tolerance
7.5	±0.4	3.0	+0.1/−0.5	8.0	+0.1/−0.5	10.0	+0.2/−0.5	0.5	±0.05
7.5	±0.4	4.0	+0.1/−0.5	9.0	+0.1/−0.5	10.0	+0.2/−0.5	0.6	±0.05
7.5	±0.4	5.0	+0.1/−0.5	10.5	+0.1/−0.5	10.0	+0.2/−0.5	0.6	±0.05
7.5	±0.4	6.0	+0.1/−0.5	12.0	+0.1/−0.5	10.5	+0.2/−0.5	0.6	±0.05
Note: See Ordering Options Table for lead length (LL/H_0) options.									

Downloaded from Arrow.com.

Performance Characteristics

Dielectric	Polyester film (polyethylene terephthalate)					
Plates	Metal layer deposited by evaporation under vacuum					
Winding	Non-inductive type					
Leads	Tinned wire					
Protection	Plastic case, thermosetting resin filled. Box material is solvent resistant and flame retardant according to UL94					
Related Documents	IEC 60384–2					
Rated Voltage V_R (VDC)	50	63	100	250	400	630
Rated Voltage V_R (VAC)	30	40	63	160	200	220
Capacitance Range (µF)	0.68 – 4.7	0.33 – 3.3	0.068 – 1.5	0.022 – 0.33	0.0033 – 0.15	0.001 – 0.047
Capacitance Values	E6 series (IEC 60063) measured at 1 kHz and +20 ±1°C					
Capacitance Tolerance	±5%, ±10%, ±20%					
Operating Temperature Range	−55°C to +105°C Upper operating temperature of +125°C is allowed for a maximum operating time of 1,000 hours. (Stacked technology only)					
Rated Temperature T_R	+85°C					
Voltage Derating	Above +85°C DC and AC voltage derating is 1.25%/°C					
Climatic Category	55/105/56 IEC 60068–1					
Storage Conditions	Storage time: ≤ 24 months from the date marked on the label package					
	Average relative humidity per year ≤ 70%					
	RH ≤ 85% for 30 days randomly distributed throughout the year					
	Dew is absent					
	Temperature: −40 to 80°C (see "Maximum Humidity in Storage Conditions" graph below)					
Test Voltage	1.6 x V_R VDC for 2 seconds (between terminations) at +25°C ±5°C					
Capacitance Drift	Maximum 3% after a 2 year storage period at a temperature of +10°C to +40°C and a relative humidity of 40% to 60%					
Reliability (Reference IEC-61709)	Operational life > 200,000 hours					
	Failure rate ≤ 1 FIT, T = +40°C, V = 0.5 x V_R					
	Failure criteria: open or short circuit, capacitance change > 10%, DF 2 times the catalog limits, IR < 0.005 x initial limit					
Maximum Pulse Steepness	dV/dt according to Table 1. For peak to peak voltages lower than rated voltage (Vpp <V_R), the specified dv/dt can be multiplied by the factor V_R/Vpp					
Temperature Coefficient	+400 (±200) ppm/°C at 1 kHz					
Self Inductance (Lead Length ~ 2 mm)	Approximately 8 nH. Maximum 1nH per 1 mm lead and capacitor length.					

Downloaded from Arrow.com.

Performance Characteristics cont.

Dissipation Factor tanδ	Maximum Values at 25°C ±5°C		
	Frequency	For all Capacitance Values	
	1 kHz	1.00%	
	10 kHz	1.50%	
Insulation Resistance	Measured at +25°C ±5°C, according to IEC 60384–2		
	Minimum Values Between Terminals		
	Voltage Charge/Time	C ≤ 0.33 µF	C > 0.33 µF
	50 VDC for V_R ≤ 100 VDC 1 minute	≥ 3,750 MΩ (≥ 50,000 MΩ)*	≥ 1,250 MΩ • µF (≥ 5,000 MΩ • µF)*
	100 VDC for V_R > 100 VDC 1 minute	≥ 30,000 MΩ (≥ 50,000 MΩ)*	

** typical value*

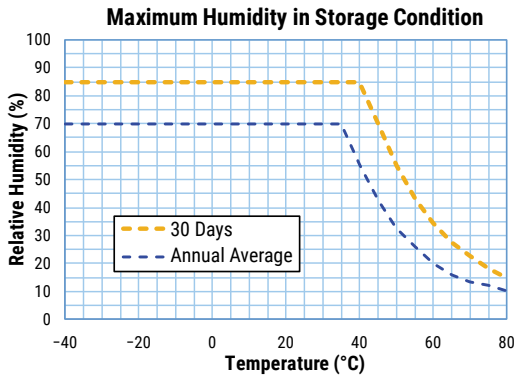

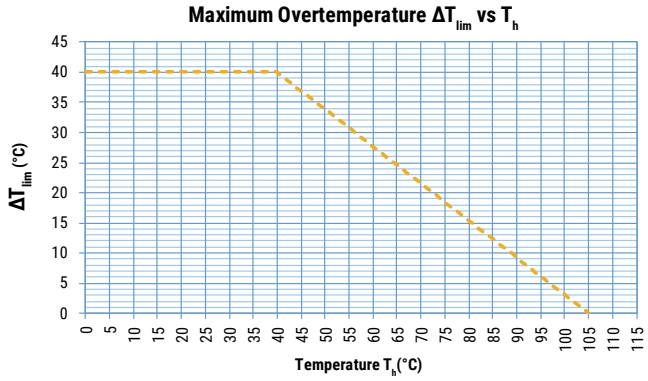

T_h is the maximum ambient temperature surrounding the capacitor or hottest contact point (e.g. tracks), whichever is higher, in the worst operation conditions in °C.

Qualification

Automotive grade products meet or exceed the requirements outlined by the Automotive Electronics Council. Details regarding test methods and conditions are referenced in document AEC–Q200, Stress Test Qualification for Passive Components. For additional information regarding the Automotive Electronics Council and AEC–Q200, please visit their website at www.aecouncil.com.

Downloaded from Arrow.com.

Maximum Voltage (V_{rms}) vs. Frequency (Sinusoidal Waveform/Th ≤ 40°C)

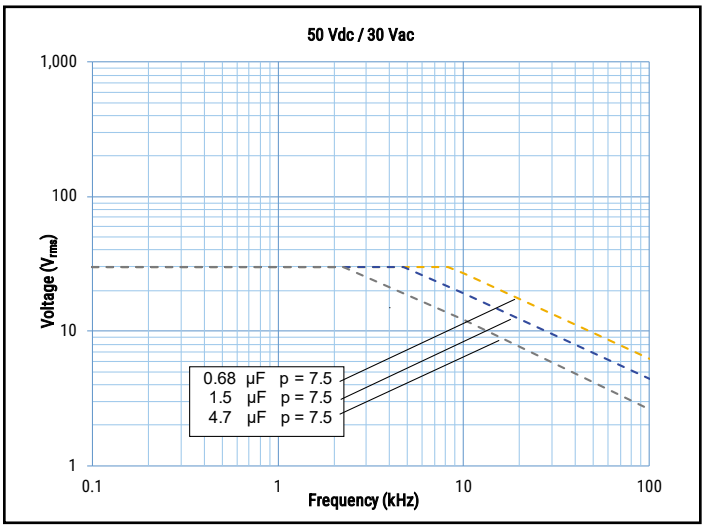

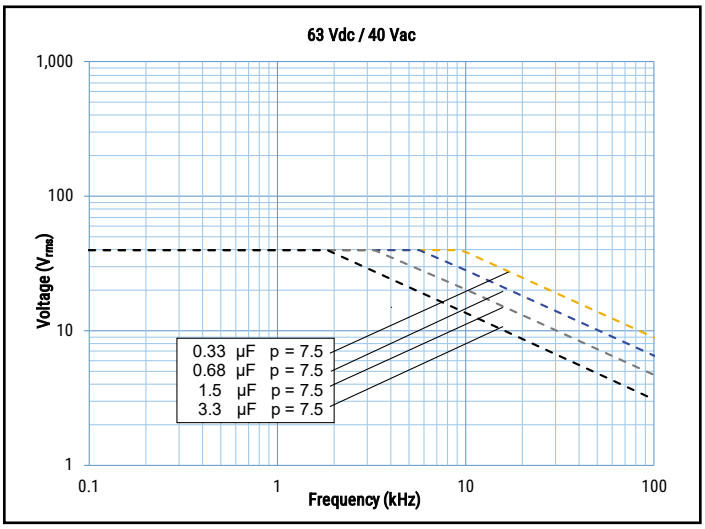

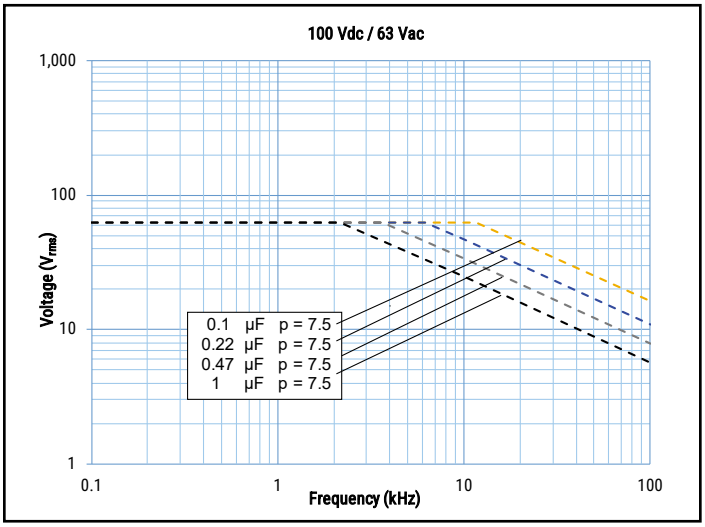

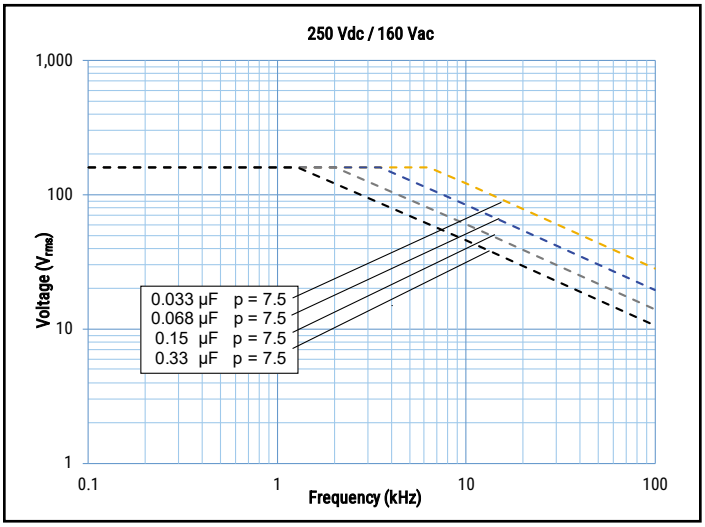

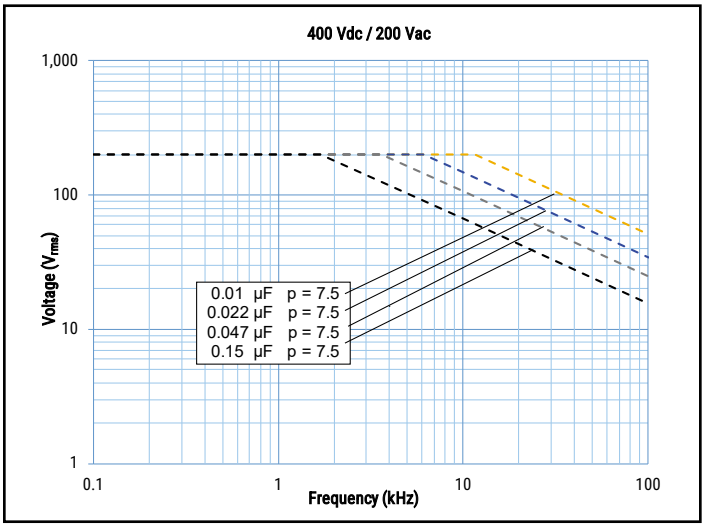

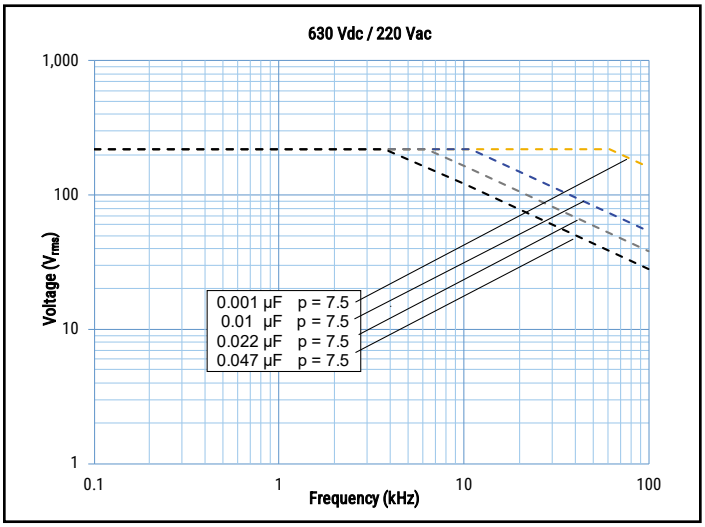

Downloaded from Arrow.com.

Maximum Current (I_{rms}) vs. Frequency (Sinusoidal Waveform/Th ≤ 40°C)

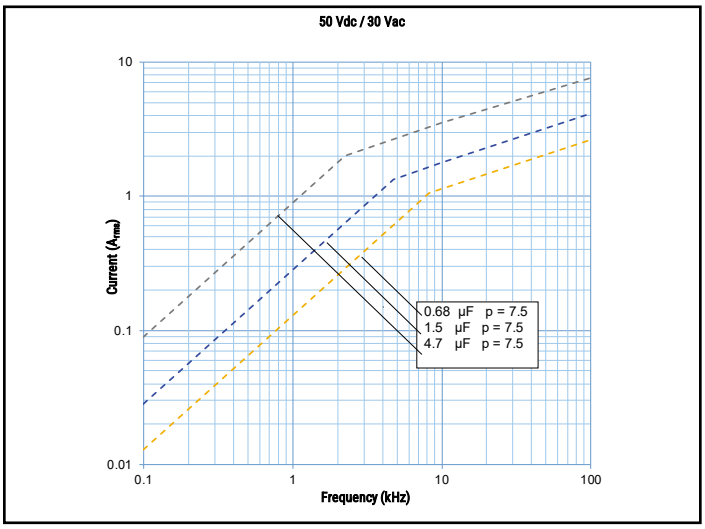

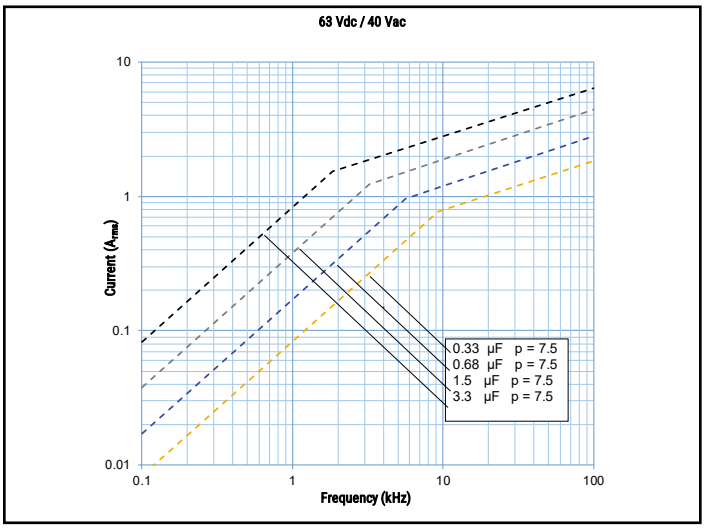

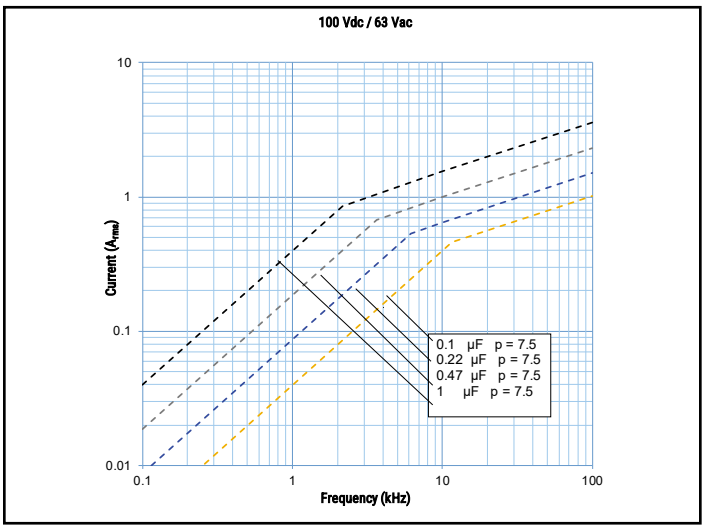

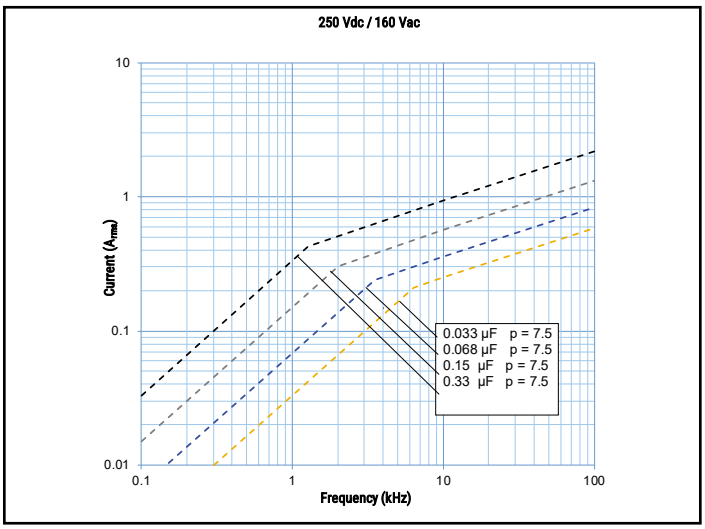

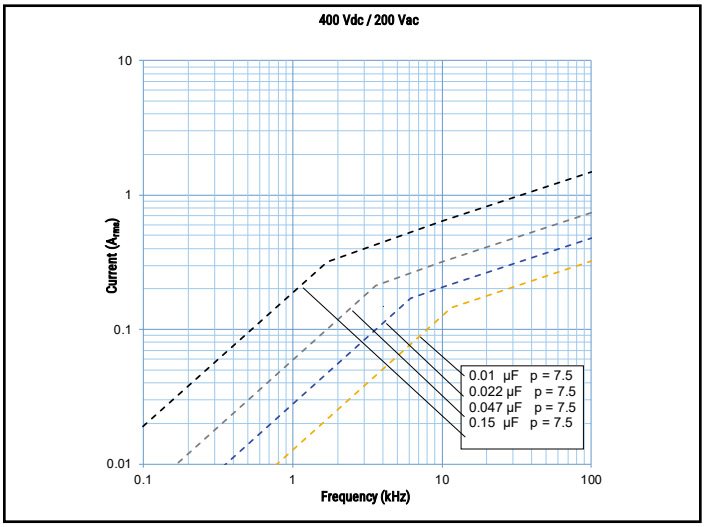

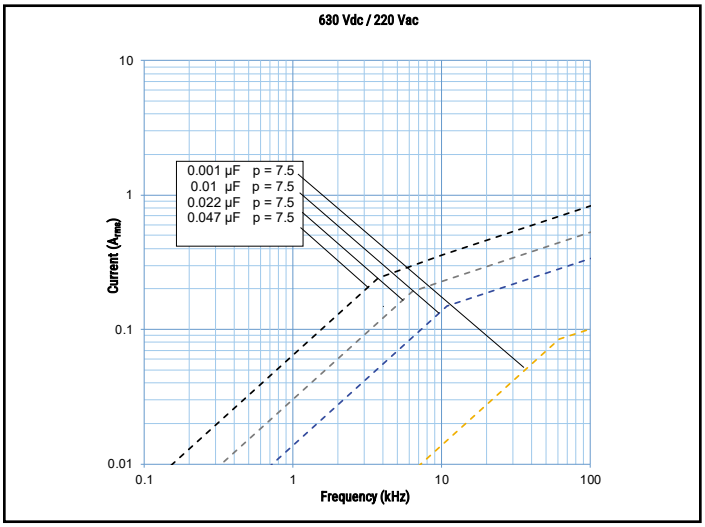

Downloaded from Arrow.com.

Environmental Test Data

Damp Heat, Steady State Test	Test Conditions:		Performances
	Temperature: Relative humidity (RH): Test duration:	+40°C ±2°C 93% ±2% 56 days	|Δ C/C| ≤ 5%, Δ tanδ ≤ 0.005 at 1 kHz IR after test ≥ 50% of initial limit
Endurance Test	**Test Conditions**		**Performances**
	Temperature: Voltage applied: Test duration:	+105°C ±2°C 1.25 x V_C 2,000 hours	|Δ C/C| ≤ 5%, Δ tanδ ≤ 0.005 at 10 kHz for C ≤ 1μF Δ tanδ ≤ 0.003 at 1 kHz for C > 1μF IR after test ≥ 50% of initial limit
Resistance to Soldering Heat Test	**Test Conditions**		**Performances**
	Solder bath temperature: Dipping time (with heat screen):	260°C ±5°C 10 seconds ±1 second	|Δ C/C| ≤ 2%, Δ tanδ ≤ 0.005 at 10 kHz for C ≤ 1μF Δ tanδ ≤ 0.003 at 1 kHz for C > 1μF IR after test ≥ initial limit

Environmental Compliance

All KEMET MKT capacitors are RoHS compliant.

Downloaded from Arrow.com.

Table 1 – Ratings & Part Number Reference

VDC	VAC	Capacitance Value (µF)	Dimensions in mm			Lead Spacing (S)	dV/dt (V/µs)	Maximum K_0 (V^2/µs)	KEMET Internal Part Number	Customer Part Number
			T	H	L					
63	40	0.33	3.0	8.0	10.0	7.5	120	15120	66DD3330(1)7A(2)	R66DD3330(1)7A(2)
63	40	0.47	3.0	8.0	10.0	7.5	120	15120	66DD3470(1)6A(2)	R66DD3470(1)6A(2)
63	40	0.68	4.0	9.0	10.0	7.5	120	15120	66DD3680(1)7A(2)	R66DD3680(1)7A(2)
63	40	1.0	4.0	9.0	10.0	7.5	120	15120	66DD4100(1)7A(2)	R66DD4100(1)7A(2)
63	40	1.5	5.0	10.5	10.0	7.5	120	15120	66DD4150(1)7A(2)	R66DD4150(1)7A(2)
63	40	2.2	6.0	12.0	10.5	7.5	120	15120	66DD4220(1)6A(2)	R66DD4220(1)6A(2)
63	40	3.3	6.0	12.0	10.5	7.5	120	15120	66DD4330(1)6A(2)	R66DD4330(1)6A(2)
100	63	0.068	3.0	8.0	10.0	7.5	150	30000	66ED2680(1)7A(2)	R66ED2680(1)7A(2)
100	63	0.10	3.0	8.0	10.0	7.5	150	30000	66ED3100(1)7A(2)	R66ED3100(1)7A(2)
100	63	0.15	3.0	8.0	10.0	7.5	150	30000	66ED3150(1)7A(2)	R66ED3150(1)7A(2)
100	63	0.22	3.0	8.0	10.0	7.5	150	30000	66ED3220(1)7A(2)	R66ED3220(1)7A(2)
100	63	0.33	4.0	9.0	10.0	7.5	150	30000	66ED3330(1)7A(2)	R66ED3330(1)7A(2)
100	63	0.47	4.0	9.0	10.0	7.5	150	30000	66ED3470(1)7A(2)	R66ED3470(1)7A(2)
100	63	0.68	4.0	9.0	10.0	7.5	150	30000	66ED3680(1)7A(2)	R66ED3680(1)7A(2)
100	63	1.0	5.0	10.5	10.0	7.5	150	30000	66ED4100(1)7A(2)	R66ED4100(1)7A(2)
100	63	1.5	6.0	12.0	10.5	7.5	150	30000	66ED4150(1)6A(2)	R66ED4150(1)6A(2)
250	160	0.022	3.0	8.0	10.0	7.5	200	100000	66ID2220(1)7A(2)	R66ID2220(1)7A(2)
250	160	0.033	3.0	8.0	10.0	7.5	200	100000	66ID2330(1)7A(2)	R66ID2330(1)7A(2)
250	160	0.047	3.0	8.0	10.0	7.5	200	100000	66ID2470(1)7A(2)	R66ID2470(1)7A(2)
250	160	0.068	3.0	8.0	10.0	7.5	200	100000	66ID2680(1)6A(2)	R66ID2680(1)6A(2)
250	160	0.10	4.0	9.0	10.0	7.5	200	100000	66ID3100(1)7A(2)	R66ID3100(1)7A(2)
250	160	0.15	4.0	9.0	10.0	7.5	200	100000	66ID3150(1)7A(2)	R66ID3150(1)7A(2)
250	160	0.22	5.0	10.5	10.0	7.5	200	100000	66ID3220(1)7A(2)	R66ID3220(1)7A(2)
250	160	0.33	6.0	12.0	10.5	7.5	200	100000	66ID3330(1)6A(2)	R66ID3330(1)6A(2)
400	**200**	**0.0033**	**3.0**	**8.0**	**10.0**	**7.5**	**275**	**220000**	**66MD1330(1)7A(2)**	**R66MD1330(1)7A(2)**
400	**200**	**0.0047**	**3.0**	**8.0**	**10.0**	**7.5**	**275**	**220000**	**66MD1470(1)7A(2)**	**R66MD1470(1)7A(2)**
400	200	0.0068	3.0	8.0	10.0	7.5	275	220000	66MD1680(1)7A(2)	R66MD1680(1)7A(2)
400	200	0.010	3.0	8.0	10.0	7.5	275	220000	66MD2100(1)7A(2)	R66MD2100(1)7A(2)
400	200	0.015	3.0	8.0	10.0	7.5	275	220000	66MD2150(1)7A(2)	R66MD2150(1)7A(2)
400	200	0.022	3.0	8.0	10.0	7.5	275	220000	66MD2220(1)6A(2)	R66MD2220(1)6A(2)
400	200	0.033	4.0	9.0	10.0	7.5	275	220000	66MD2330(1)7A(2)	R66MD2330(1)7A(2)
400	200	0.047	4.0	9.0	10.0	7.5	275	220000	66MD2470(1)7A(2)	R66MD2470(1)7A(2)
400	200	0.068	5.0	10.5	10.0	7.5	275	220000	66MD2680(1)7A(2)	R66MD2680(1)7A(2)
400	200	0.10	6.0	12.0	10.5	7.5	275	220000	66MD3100(1)6A(2)	R66MD3100(1)6A(2)
400	200	0.15	6.0	12.0	10.5	7.5	275	220000	66MD3150(1)6A(2)	R66MD3150(1)6A(2)
630	**220**	**0.0010**	**3.0**	**8.0**	**10.0**	**7.5**	**40**	**50400**	**66PD1100(1)10(2)**	**R66PD1100(1)10(2)**
630	**220**	**0.0015**	**3.0**	**8.0**	**10.0**	**7.5**	**40**	**50400**	**66PD1150(1)10(2)**	**R66PD1150(1)10(2)**
630	**220**	**0.0022**	**3.0**	**8.0**	**10.0**	**7.5**	**40**	**50400**	**66PD1220(1)10(2)**	**R66PD1220(1)10(2)**
630	**220**	**0.0033**	**3.0**	**8.0**	**10.0**	**7.5**	**40**	**50400**	**66PD1330(1)10(2)**	**R66PD1330(1)10(2)**
630	**220**	**0.0047**	**3.0**	**8.0**	**10.0**	**7.5**	**40**	**50400**	**66PD1470(1)10(2)**	**R66PD1470(1)10(2)**
630	**220**	**0.0068**	**4.0**	**9.0**	**10.0**	**7.5**	**40**	**50400**	**66PD1680(1)10(2)**	**R66PD1680(1)10(2)**
630	220	0.010	4.0	9.0	10.0	7.5	300	378000	66PD2100(1)7A(2)	R66PD2100(1)7A(2)
630	220	0.015	4.0	9.0	10.0	7.5	300	378000	66PD2150(1)7A(2)	R66PD2150(1)7A(2)
630	220	0.022	5.0	10.5	10.0	7.5	300	378000	66PD2220(1)7A(2)	R66PD2220(1)7A(2)
630	220	0.033	6.0	12.0	10.5	7.5	300	378000	66PD2330(1)6A(2)	R66PD2330(1)6A(2)
630	220	0.047	6.0	12.0	10.5	7.5	300	378000	66PD2470(1)6A(2)	R66PD2470(1)6A(2)
VDC	**VAC**	**Capacitance Value (µF)**	**T (mm)**	**H (mm)**	**L (mm)**	**Lead Spacing**	**dV/dt (V/µs)**	**Max K_0 (V^2/µs)**	**KEMET Internal Part Number**	**Customer Part Number**

(1) Insert lead and packaging code. See Ordering Options Table for available options.
(2) J = 5%, K = 10%, M = 20%
Bold denotes wound capacitor technology

Downloaded from Arrow.com.

Soldering Process

The implementation of the RoHS directive has resulted in the selection of SnAgCu (SAC) alloys or SnCu alloys as primary solder. This has increased the liquidus temperature from that of 183°C for SnPb eutectic alloy to 217 – 221°C for the new alloys. As a result, the heat stress to the components, even in wave soldering, has increased considerably due to higher pre-heat and wave temperatures. Polypropylene capacitors are especially sensitive to heat (the melting point of polypropylene is 160 – 170°C). Wave soldering can be destructive, especially for mechanically small polypropylene capacitors (with lead spacing of 5 to 15 mm), and great care has to be taken during soldering. The recommended solder profiles from KEMET should be used. Please consult KEMET with any questions. In general, the wave soldering curve from IEC Publication 61760–1 Edition 2, serves as a solid guideline for successful soldering. Please see Figure 1.

Reflow soldering is not recommended for through-hole film capacitors. Exposing capacitors to a soldering profile in excess of the above the recommended limits may result to degradation or permanent damage to the capacitors.

Do not place the polypropylene capacitor through an adhesive curing oven to cure resin for surface mount components. Insert through-hole parts after the curing of surface mount parts. Consult KEMET to discuss the actual temperature profile in the oven, if through-hole components must pass through the adhesive curing process. A maximum two soldering cycles is recommended. Please allow time for the capacitor surface temperature to return to a normal temperature before the second soldering cycle.

Manual Soldering Recommendations

Following is the recommendation for manual soldering with a soldering iron.

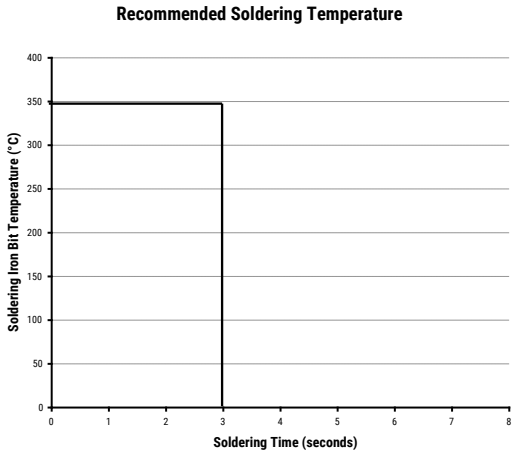

The soldering iron tip temperature should be set at 350°C (+10°C maximum) with the soldering duration not to exceed more than 3 seconds.

Wave Soldering Recommendations

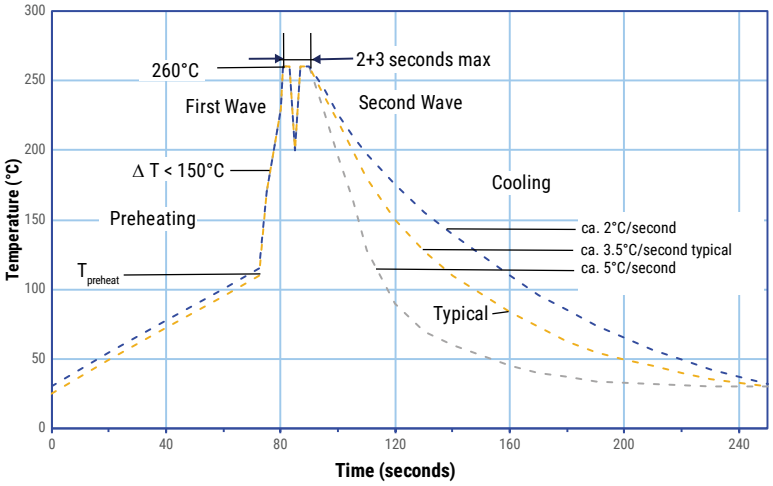

Downloaded from Arrow.com.

Soldering Process cont.

Wave Soldering Recommendations cont.

1. The table indicates the maximum set-up temperature of the soldering process
 Figure 1.

Dielectric Film Material	Maximum Preheat Temperature		Maximum Peak Soldering Temperature	
	Capacitor Pitch ≤ 15 mm	Capacitor Pitch > 15 mm	Capacitor Pitch ≤ 15 mm	Capacitor Pitch > 15 mm
Polyester	130°C	130°C	270°C	270°C
Polypropylene	110°C	130°C	260°C	270°C
Paper	130°C	140°C	270°C	270°C
Polyphenylene Sulphide	150°C	160°C	270°C	270°C

2. The maximum temperature measured inside the capacitor:
 Set the temperature so that inside the element the maximum temperature is below the limit:

Dielectric Film Material	Maximum temperature measured inside the element
Polyester	160°C
Polypropylene	110°C
Paper	160°C
Polyphenylene Sulphide	160°C

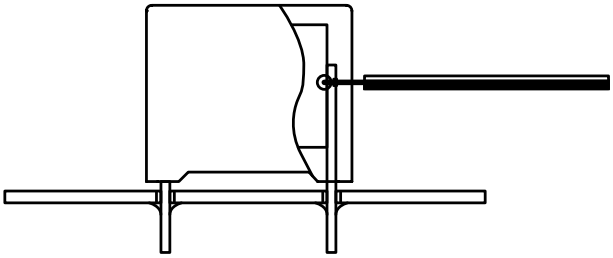

Temperature monitored inside the capacitor.

Selective Soldering Recommendations

Selective dip soldering is a variation of reflow soldering. In this method, the printed circuit board with through-hole components to be soldered is preheated and transported over the solder bath as in normal flow soldering without touching the solder. When the board is over the bath, it is stopped and pre-designed solder pots are lifted from the bath with molten solder only at the places of the selected components, and pressed against the lower surface of the board to solder the components.

The temperature profile for selective soldering is similar to the double wave flow soldering outlined in this document, **however, instead of two baths, there is only one bath with a time from 3 to 10 seconds.** In selective soldering, the risk of overheating is greater than in double wave flow soldering, and great care must be taken so that the parts are not overheated.

Downloaded from Arrow.com.

Marking

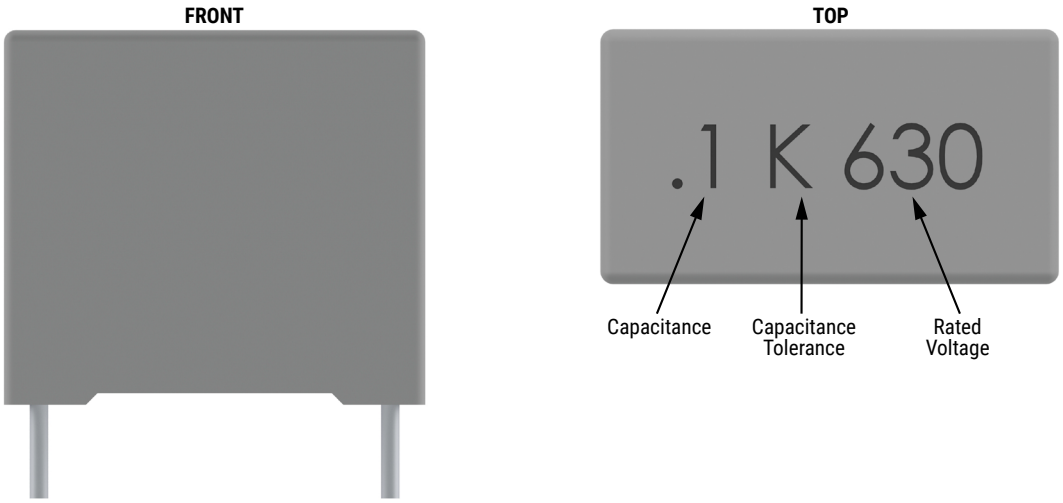

Packaging Quantities

Lead Spacing	Thickness (mm)	Height (mm)	Length (mm)	Bulk Short Leads	Bulk Long Leads	Standard Reel 355 mm	Ammo Taped
7.5	3.0	8.0	10.0	1,500	1,750	2,100	2,800
	4.0	9.0	10.0	2,000	1,500	1,500	2,100
	5.0	10.5	10.0	1,500	1,000	1,200	1,600
	6.0	12.0	10.5	1,000	800	1,000	1,350

Downloaded from Arrow.com.

Lead Taping & Packaging (IEC 60286–2)

Figure 1 — Lead Spacing 5 & 7.5 mm

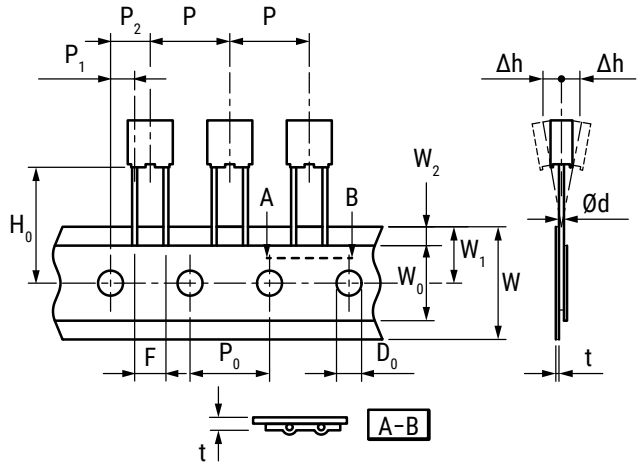

Figure 2 — Lead Spacing 7.5 mm

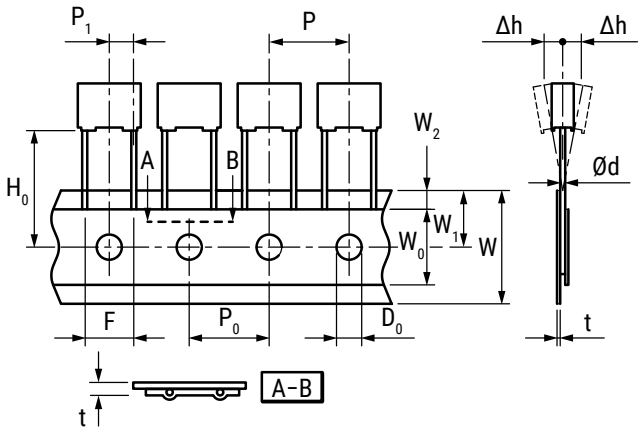

Description	Symbol	Dimensions (mm)			
		Lead Spacing			Tolerance
		5	7.5	7.5	
		Figure 1	Figure 1	Figure 2	
Lead wire diameter	d	0.5 – 0.6	0.5 – 0.6	0.5 – 0.6	±0.05
Taping lead space	P	12.7	12.7	12.7	±1
Feed hole lead space	P_0	12.7	12.7	12.7	±0.2*
Centering of the lead wire	P_1	3.85	2.6	3.75	±0.7
Centering of the body	P_2	6.35	6.35		±1.3
Lead spacing	F	5	7.5	7.5	+0.6/−0.1
Component alignment	Δh	0	0	0	±2
Height of component from tape center	H_0**	18.5	18.5	18.5	±0.5
Carrier tape width	W	18	18	18	+1/−0.5
Hold down tape width	W_0	6	6	6	Minimum
Hole position	W_1	9	9	9	±0.5
Hold down tape position	W_2	3	3	3	Maximum
Feed hole diameter	D_0	4	4	4	±0.2
Tape thickness	t	0.7	0.7	0.7	±0.2

**Maximum 1 mm on 20 lead spaces.*
***H_0 = 16.5 mm is available upon request.*
For orders of capacitors with lead space = 7.5 mm, please specify the requested version: Figure 1 = Packaging code "CK" / Figure 2 – Packaging code "28"

Downloaded from Arrow.com.

Ammo Specifications

Dimensions in mm		
H	W	T
360 *	340	59

** Lower dimension available upon request (maximum 295 mm)*

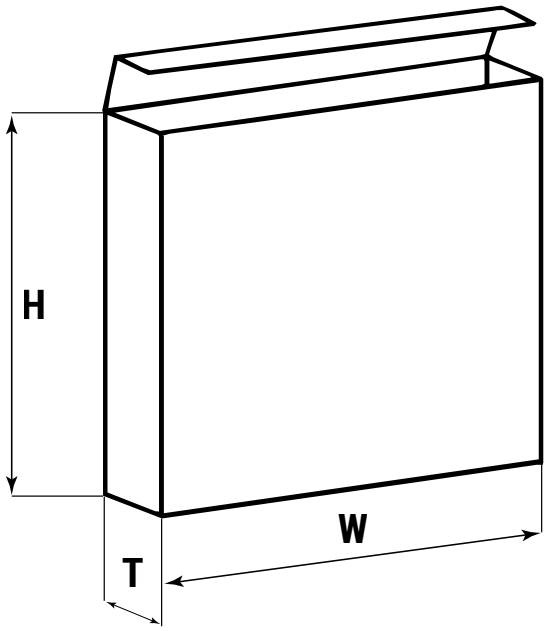

Reel Specifications

Dimensions in mm		
D	H	W
355	30	55 maximum

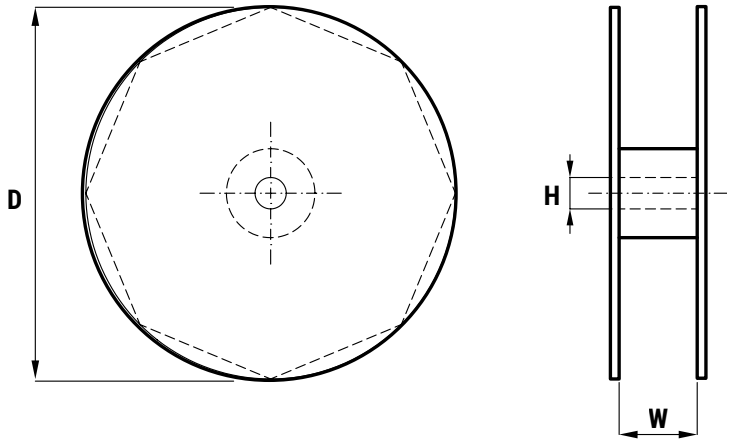

Downloaded from Arrow.com.

KEMET Electronics Corporation Sales Offices

For a complete list of our global sales offices, please visit https://www.yageogroup.com/SalesResources/SalesOffices

Disclaimer

YAGEO Corporation and its affiliates do not recommend the use of commercial or automotive grade products for high reliability applications or manned space flight.

All product specifications, statements, information and data (collectively, the "Information") in this datasheet are subject to change. The customer is responsible for checking and verifying the extent to which the Information contained in this publication is applicable to an order at the time the order is placed. All Information given herein is believed to be accurate and reliable, but it is presented without guarantee, warranty, or responsibility of any kind, expressed or implied.

Statements of suitability for certain applications are based on KEMET Electronics Corporation's ("KEMET") knowledge of typical operating conditions for such applications, but are not intended to constitute – and KEMET specifically disclaims – any warranty concerning suitability for a specific customer application or use. The Information is intended for use only by customers who have the requisite experience and capability to determine the correct products for their application. Any technical advice inferred from this Information or otherwise provided by KEMET with reference to the use of KEMET's products is given gratis, and KEMET assumes no obligation or liability for the advice given or results obtained.

Although KEMET designs and manufactures its products to the most stringent quality and safety standards, given the current state of the art, isolated component failures may still occur. Accordingly, customer applications which require a high degree of reliability or safety should employ suitable designs or other safeguards (such as installation of protective circuitry or redundancies) in order to ensure that the failure of an electrical component does not result in a risk of personal injury or property damage.

Although all product–related warnings, cautions and notes must be observed, the customer should not assume that all safety measures are indicated or that other measures may not be required.

Additional information about production site flexibility can be found <here>

KEMET is a registered trademark of KEMET Electronics Corporation.

Downloaded from Arrow.com.