CYWUSB6932
CYWUSB6934

WirelessUSB™ LS 2.4 GHz DSSS Radio SoC

Features

- 2.4-GHz radio transceiver
- Operates in the unlicensed Industrial, Scientific, and Medical (ISM) band (2.4 GHz to 2.483 GHz)
- Receive sensitivity: –90 dBm
- Up to 0 dBm output power
- Range of up to 10 meters or more
- Data throughput of up to 62.5 kbits/sec
- Highly integrated low cost, minimal number of external components required
- Dual direct sequence spread spectrum (DSSS reconfigurable baseband correlators
- SPI microcontroller interface (up to 2-MHz data rate)
- 13-MHz ± 50-ppm input clock operation
- Low standby current < 1 µA
- Integrated 30-bit Manufacturing ID
- Operating voltage from 2.7 V to 3.6 V
- Operating temperature from 0 °C to 70 °C
- Offered in a small footprint 48 quad flat pack no leads (QFN)

Functional Description

The CYWUSB6932[1]/CYWUSB6934 Integrated Circuits (ICs) are highly integrated 2.4-GHz DSSS radio system-on-chip (SoC) ICs. From the serial peripheral interface (SPI) to the antenna, these ICs are single-chip 2.4-GHz DSSS Gaussian Frequency Shift Keying (GFSK) baseband modems that connect directly to a microcontroller via simple serial interface.

The CYWUSB6932 transmit-only IC and the CYWUSB6934 transceiver IC are available in a small footprint 48-pin QFN package.

Not Recommended for New Designs

Logic Block Diagram – CYWUSB6932/CYWUSB6934

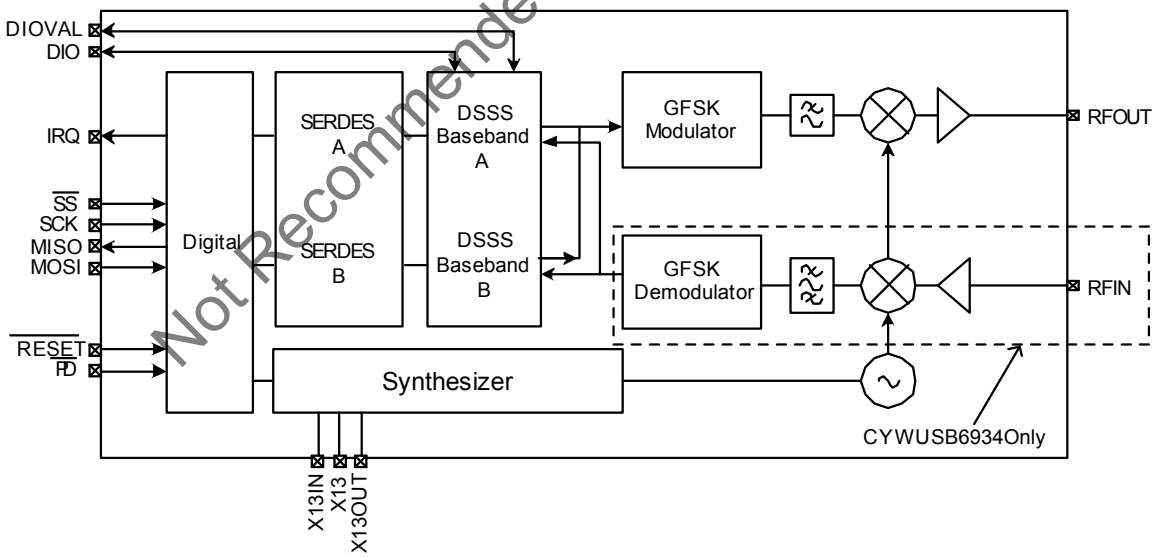

Note
1. CYWUSB6932 is now obsolete and is no longer supported.

Downloaded from Arrow.com.

Contents

Applications **3**
Applications Support 3
Functional Overview **3**
2.4-GHz Radio 3
GFSK Modem 3
Dual DSSS Baseband 3
Serializer/Deserializer (SERDES) 4
Application Interfaces 4
Clocking and Power Management 4
Receive Signal Strength Indicator (RSSI) 4
Application Interfaces **4**
SPI Interface 4
DIO Interface 6
Interrupts 6
Application Examples **7**
Register Descriptions **9**
Pin Definitions **26**
Absolute Maximum Ratings **28**
Operating Conditions **28**
DC Characteristics **28**
AC Characteristics[16] **29**
Radio Parameters 31
Power Management Timing 32
Ordering Information **35**
Ordering Code Definitions 35
Package Diagram **36**
Acronyms **37**
Document Conventions **37**
Units of Measure 37
Document History Page **38**
Sales, Solutions, and Legal Information **39**
Worldwide Sales and Design Support 39
Products 39
PSoC® Solutions 39
Cypress Developer Community 39
Technical Support 39

Not Recommended for New Designs

Downloaded from Arrow.com.

Applications

- PC human interface devices (HIDs)
  - Mice
  - Keyboards
  - Joysticks
- Peripheral gaming devices
  - Game controllers
  - Console keyboards
- General
  - Presenter tools
  - Remote controls
  - Consumer electronics
  - Barcode scanners
  - POS peripherals
  - Toys

Applications Support

The CYWUSB6932/CYWUSB6934 ICs are supported by the CY3632 WirelessUSB Development Kit. The development kit provides all of the materials and documents needed to cut the cord on wired applications such as:

1. Two radio modules that connect directly to two prototyping platform boards
2. Comprehensive WirelessUSB protocol code examples
3. A WirelessUSB Listener tool
4. All of the associated schematics, gerber files, and bill of materials.

The CY4632 WirelessUSB LS keyboard mouse reference design provides a production-worthy example of a wireless mouse and keyboard system.

The CY3633 WirelessUSB LS gaming development kit provides support for designing a wireless gamepad for the major gaming consoles and is offered as an accessory to the CY3632 WirelessUSB development kit.

Functional Overview

The CYWUSB6932/CYWUSB6934 ICs provide a complete WirelessUSB LS SPI to antenna radio modem. The SoC is designed to implement wireless devices operating in the worldwide 2.4-GHz ISM frequency band (2.400 GHz to 2.4835 GHz). It is intended for systems compliant with world-wide regulations covered by ETSI EN 301 489-1 V1.4.1, ETSI EN 300 328-1 V1.3.1 (European countries); FCC CFR 47 Part 15 (USA and Industry Canada) and ARIB STD-T66 (Japan).

The CYWUSB6934 IC contains a 2.4-GHz radio transceiver, a GFSK modem and a dual DSSS reconfigurable baseband. The CYWUSB6932 IC contains a 2.4-GHz radio transmit-only, a GFSK modem and a DSSS baseband. The radio and baseband are both code- and frequency-agile. Forty-nine spreading codes selected for optimal performance (Gold codes) are supported across 78 1-MHz channels yielding a theoretical spectral capacity of 3822 channels. Both ICs support a range of up to 10 meters or more.

2.4-GHz Radio

The receiver and transmitter are a single-conversion low-Intermediate Frequency (low-IF) architecture with fully integrated IF channel matched filters to achieve high performance in the presence of interference. An integrated Power Amplifier (PA) provides an output power control range of 30 dB in seven steps.

Table 1. Internal PA Output Power Step Table

PA Setting	Typical Output Power (dBm)
7	0
6	–2.4
5	–5.6
4	–9.7
3	–16.4
2	–20.8
1	–24.8
0	–29.0

Both the receiver and transmitter integrated Voltage Controlled Oscillator (VCO) and synthesizer have the agility to cover the complete 2.4-GHz GFSK radio transmitter ISM band. The synthesizer provides the frequency-hopping local oscillator for the transmitter and receiver. The VCO loop filter is also integrated on-chip.

GFSK Modem

The transmitter uses a DSP-based vector modulator to convert the 1-MHz chips to an accurate GFSK carrier.

The receiver uses a fully integrated Frequency Modulator (FM) detector with automatic data slicer to demodulate the GFSK signal.

Dual DSSS Baseband

Data is converted to DSSS chips by a digital spreader. De-spreading is performed by an oversampled correlator. The DSSS baseband cancels spurious noise and assembles properly correlated data bytes.

The DSSS baseband has three operating modes: 64 chips/bit Single Channel, 32 chips/bit Single Channel, and 32 chips/bit Single Channel Dual Data Rate (DDR).

64 Chips/Bit Single Channel

The baseband supports a single data stream operating at 15.625 kbits/sec. The advantage of selecting this mode is its ability to tolerate a noisy environment. This is because the 15.625 kbits/sec data stream utilizes the longest PN Code resulting in the highest probability for recovering packets over the air. This mode can also be selected for systems requiring data transmissions over longer ranges.

32 Chips/Bit Single Channel

The baseband supports a single data stream operating at 31.25 kbits/sec.

Not Recommended for New Designs

Downloaded from Arrow.com.

32 Chips/Bit Single Channel Dual Data Rate (DDR)

The baseband spreads bits in pairs and supports a single data stream operating at 62.5 kbits/sec.

Serializer/Deserializer (SERDES)

The CYWUSB6934 IC has a data Serializer/Deserializer (SERDES), which provides byte-level framing of transmit and receive data. Bytes for transmission are loaded into the SERDES and receive bytes are read from the SERDES via the SPI interface. The SERDES provides double buffering of transmit and receive data. While one byte is being transmitted by the radio the next byte can be written to the SERDES data register insuring there are no breaks in transmitted data.

After a receive byte has been received it is loaded into the SERDES data register and can be read at any time until the next byte is received, at which time the old contents of the SERDES data register will be overwritten. The CYWUSB6932 IC only has a data serializer.

Application Interfaces

Both ICs have a fully synchronous SPI slave interface for connectivity to the application MCU. Configuration and byte-oriented data transfer can be performed over this interface. An interrupt is provided to trigger real time events.

An optional SERDES Bypass mode (DIO) is provided for applications that require a synchronous serial bit-oriented data path. This interface is for data only.

Clocking and Power Management

A 13-MHz crystal (±50 ppm or better) is directly connected to X13IN and X13 without the need for external capacitors. Both ICs have a programmable trim capability for adjusting the on-chip load capacitance supplied to the crystal.

Below are the requirements for the crystal to be directly connected to X13IN and X13:

- Nominal frequency: 13 MHz
- Operating mode: Fundamental mode
- Resonance mode: Parallel resonant
- Frequency stability: ± 50 ppm
- Series resistance: ≤ 100 ohms
- Load capacitance: 10 pF
- Drive level: 10 µW to 100 µW

The Radio Frequency (RF) circuitry has on-chip decoupling capacitors. Both devices are powered from a 2.7 V to 3.6 V DC supply. Both devices can be shutdown to a fully static state using the PD pin.

Receive Signal Strength Indicator (RSSI)

The RSSI register (Reg 0x22) (applies only to the CYWUSB6934 IC) returns the relative signal strength of the ON-channel signal power and can be used to:

1. Determine the connection quality
2. Determine the value of the noise floor
3. Check for a quiet channel before transmitting.

The internal RSSI voltage is sampled through a 5-bit analog-to-digital converter (ADC). A state machine controls the conversion process. Under normal conditions, the RSSI state machine initiates a conversion when an ON-channel carrier is detected and remains above the noise floor for over 50 µs. The conversion produces a 5-bit value in the RSSI register (Reg 0x22, bits 4:0) along with a valid bit, RSSI register (Reg 0x22, bit 5). The state machine then remains in HALT mode and does not reset for a new conversion until the receive mode is toggled off and on. Once a connection has been established, the RSSI register can be read to determine the relative connection quality of the channel. A RSSI register value lower than 10 indicates that the received signal strength is low, a value greater than 28 indicates a strong signal level.

To check for a quiet channel before transmitting, first set up receive mode properly and read the RSSI register (Reg 0x22). If the valid bit is zero, then force the Carrier Detect register (Reg 0x2F, bit 7=1) to initiate an ADC conversion. Then, wait greater than 50 µs and read the RSSI register again. Next, clear the Carrier Detect Register (Reg 0x2F, bit 7=0) and turn the receiver OFF. Measuring the noise floor of a quiet channel is inherently a 'noisy' process so, for best results, this procedure should be repeated several times (~20) to compute an average noise floor level. A RSSI register value of 0-10 indicates a channel that is relatively quiet. A RSSI register value greater than 10 indicates the channel is probably being used. A RSSI register value greater than 28 indicates the presence of a strong signal.

Application Interfaces

SPI Interface

The CYWUSB6932/CYWUSB6934 ICs have a four-wire SPI communication interface between an application MCU and one or more slave devices. The SPI interface supports single-byte and multi-byte serial transfers. The four-wire SPI communications interface consists of Master Out-Slave In (MOSI), Master In-Slave Out (MISO), Serial Clock (SCK), and Slave Select ($\overline{SS}$).

The SPI receives SCK from an application MCU on the SCK pin. Data from the application MCU is shifted in on the MOSI pin. Data to the application MCU is shifted out on the MISO pin. The active-low Slave Select ($\overline{SS}$) pin must be asserted to initiate a SPI transfer.

The application MCU can initiate a SPI data transfer via a multi-byte transaction. The first byte is the Command/Address byte, and the following bytes are the data bytes as shown in Figure 2 through Figure 3. The $\overline{SS}$ signal should not be deasserted between bytes. The SPI communications is as follows:

- Command Direction (bit 7) = “0” Enables SPI read transaction. A “1” enables SPI write transactions.
- Command Increment (bit 6) = “1” Enables SPI auto address increment. When set, the address field automatically increments at the end of each data byte in a burst access, otherwise the same address is accessed.
- Six bits of address.
- Eight bits of data.

The SPI communications interface has a burst mechanism, where the command byte can be followed by as many data bytes as desired. A burst transaction is terminated by deasserting the slave select ($\overline{SS}$ = 1). For burst read transactions, the application

Not Recommended for New Designs

Downloaded from Arrow.com.

MCU must abide by the timing shown in Figure 12.

The SPI communications interface single read and burst read sequences are shown in Figure 1 and Figure 2, respectively.

The SPI communications interface single write and burst write sequences are shown in Figure 3 and Figure 4, respectively.

Table 2. SPI Transaction Format

	Byte 1			Byte 1+N
Bit #	7	6	[5:0]	[7:0]
Bit Name	DIR	INC	Address	Data

Figure 1. SPI Single Read Sequence

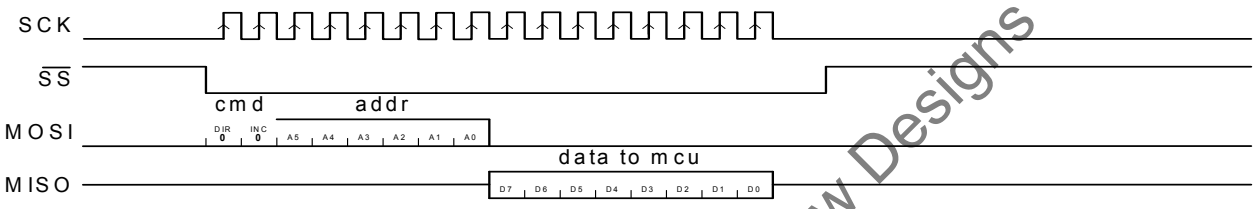

Figure 2. SPI Burst Read Sequence

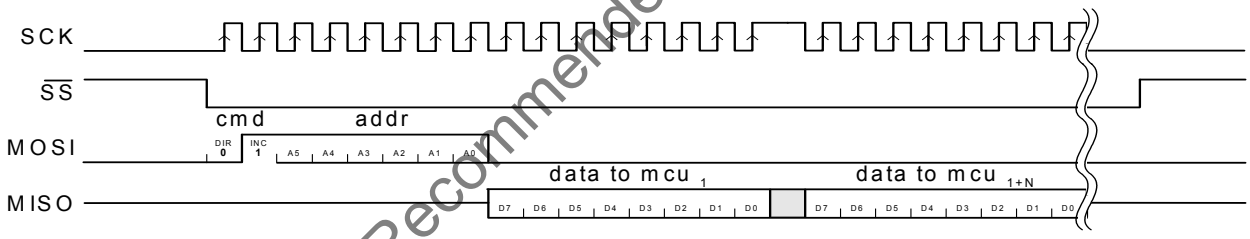

Figure 3. SPI Single Write Sequence

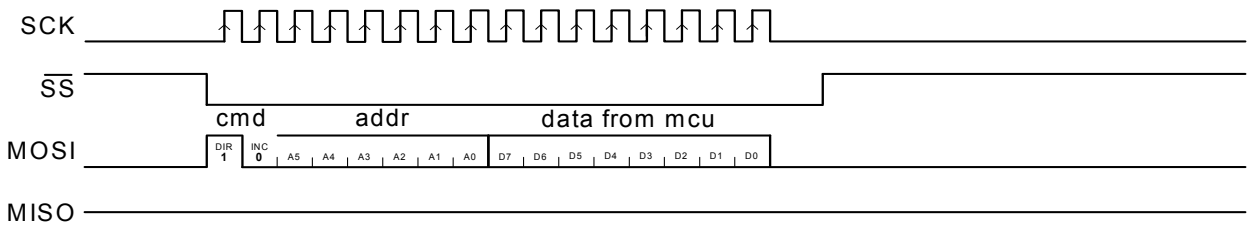

Not Recommended for New Designs

Downloaded from Arrow.com.

Figure 4. SPI Burst Write Sequence

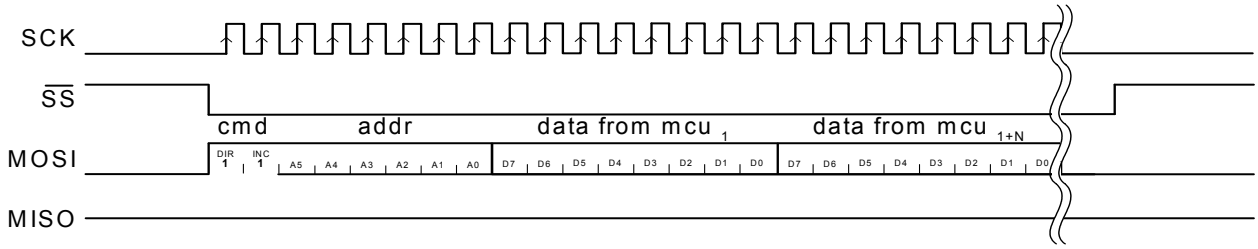

DIO Interface

The DIO communications interface is an optional SERDES bypass data-only transfer interface. In receive mode, DIO and DIOVAL are valid after the falling edge of IRQ, which clocks the data as shown in Figure 5. In transmit mode, DIO and DIOVAL are sampled on the falling edge of the IRQ, which clocks the data as shown in Figure 6. The application MCU samples the DIO and DIOVAL on the rising edge of IRQ.

Interrupts

The CYWUSB6932/CYWUSB6934 ICs feature three sets of interrupts: transmit, receive (CYWUSB6934 only), and a wake interrupt. These interrupts all share a single pin (IRQ), but can be independently enabled/disabled. In transmit mode, all receive interrupts are automatically disabled, and in receive mode all transmit interrupts are automatically disabled. However, the contents of the enable registers are preserved when switching between transmit and receive modes.

Interrupts are enabled and the status read through 6 registers: Receive Interrupt Enable (Reg 0x07), Receive Interrupt Status (Reg 0x08), Transmit Interrupt Enable (Reg 0x0D), Transmit Interrupt Status (Reg 0x0E), Wake Enable (Reg 0x1C), Wake Status (Reg 0x1D).

If more than 1 interrupt is enabled at any time, it is necessary to read the relevant interrupt status register to determine which event caused the IRQ pin to assert. Even when a given interrupt source is disabled, the status of the condition that would otherwise cause an interrupt can be determined by reading the appropriate interrupt status register. It is therefore possible to use the devices without making use of the IRQ pin at all. Firmware can poll the interrupt status register(s) to wait for an event, rather than using the IRQ pin.

The polarity of all interrupts can be set by writing to the Configuration register (Reg 0x05), and it is possible to configure the IRQ pin to be open drain (if active low) or open source (if active high).

Wake Interrupt

When the $\overline{PD}$ pin is low, the oscillator is stopped. After $\overline{PD}$ is deasserted, the oscillator takes time to start, and until it has done so, it is not safe to use the SPI interface. The wake interrupt indicates that the oscillator has started, and that the device is ready to receive SPI transfers.

The wake interrupt is enabled by setting bit 0 of the Wake Enable register (Reg 0x1C, bit 0=1). Whether or not a wake interrupt is pending is indicated by the state of bit 0 of the Wake Status register (Reg 0x1D, bit 0). Reading the Wake Status register (Reg 0x1D) clears the interrupt.

Transmit Interrupts

Four interrupts are provided to flag the occurrence of transmit events. The interrupts are enabled by writing to the Transmit Interrupt Enable register (Reg 0x0D), and their status may be determined by reading the Transmit Interrupt Status register (Reg 0x0E). If more than 1 interrupt is enabled, it is necessary to read the Transmit Interrupt Status register (Reg 0x0E) to determine which event caused the IRQ pin to assert.

The function and operation of these interrupts are described in detail in Register Descriptions on page 9.

Receive Interrupts

Eight interrupts are provided to flag the occurrence of receive events, four each for SERDES A and B. In 64 chips/bit and 32 chips/bit DDR modes, only the SERDES A interrupts are available, and the SERDES B interrupts will never trigger, even if enabled. The interrupts are enabled by writing to the Receive Interrupt Enable register (Reg 0x07), and their status may be determined by reading the Receive Interrupt Status register (Reg 0x08). If more than one interrupt is enabled, it is necessary to read the Receive Interrupt Status register (Reg 0x08) to determine which event caused the IRQ pin to assert.

The function and operation of these interrupts are described in detail in Register Descriptions on page 9.

Not Recommended for New Designs

Downloaded from Arrow.com.

Figure 5. DIO Receive Sequence

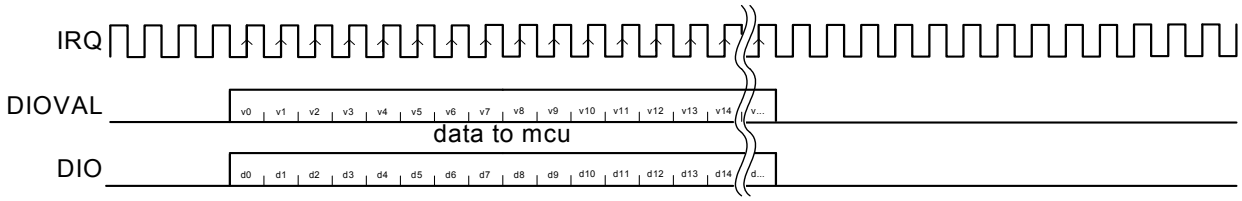

Figure 6. DIO Transmit Sequence

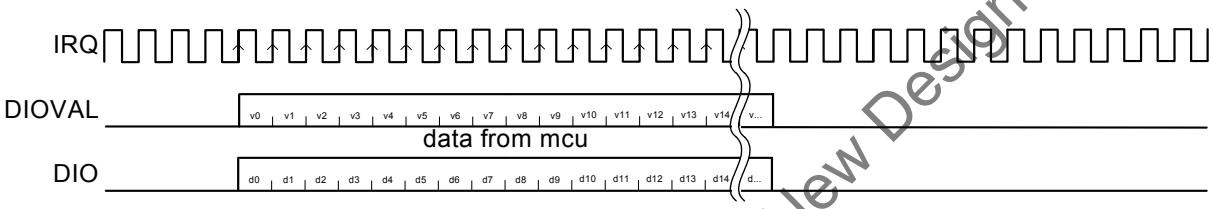

Not Recommended for New Designs

Application Examples

Figure 7. CYWUSB6932 Transmit-Only Battery-Powered Device

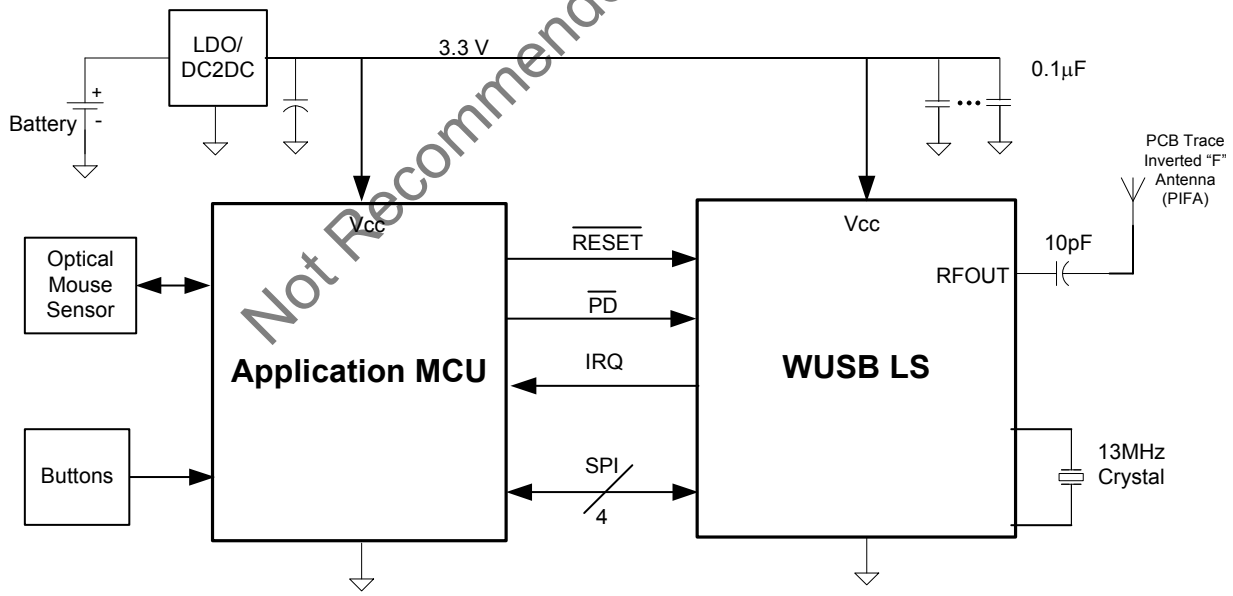

Downloaded from Arrow.com.

Figure 8. CYWUSB6934 USB Bridge Transceiver

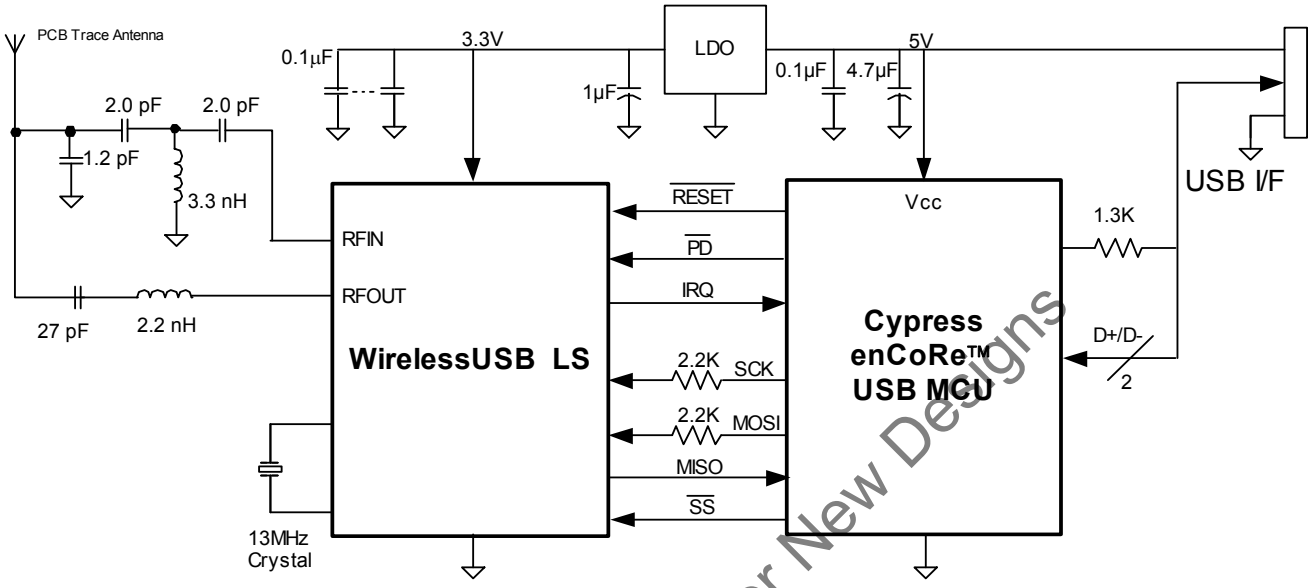

Not Recommended for New Designs

Downloaded from Arrow.com.

Register Descriptions

Table 3 displays the list of registers inside the CYWUSB6932/CYWUSB6934 ICs that are addressable through the SPI interface. All registers are read and writable, except where noted.

Table 3. CYWUSB6932/CYWUSB6934 Register Map[2]

Register Name	Mnemonic	Address	Page	Default	Access
Revision ID	REG_ID	0x00	page 10	0x07	RO
Control	REG_CONTROL	0x03	page 10	0x00	RW
Data Rate	REG_DATA_RATE	0x04	page 11	0x00	RW
Configuration	REG_CONFIG	0x05	page 11	0x01	RW
SERDES Control	REG_SERDES_CTL	0x06	page 12	0x03	RW
Receive SERDES Interrupt Enable	REG_RX_INT_EN	0x07[3]	page 13	0x00	RW
Receive SERDES Interrupt Status	REG_RX_INT_STAT	0x08[3]	page 14	0x00	RO
Receive SERDES Data A	REG_RX_DATA_A	0x09[3]	page 16	0x00	RO
Receive SERDES Valid A	REG_RX_VALID_A	0x0A[3]	page 16	0x00	RO
Receive SERDES Data B	REG_RX_DATA_B	0x0B[3]	page 16	0x00	RO
Receive SERDES Valid B	REG_RX_VALID_B	0x0C[3]	page 17	0x00	RO
Transmit SERDES Interrupt Enable	REG_TX_INT_EN	0x0D	page 17	0x00	RW
Transmit SERDES Interrupt Status	REG_TX_INT_STAT	0x0E	page 18	0x00	RO
Transmit SERDES Data	REG_TX_DATA	0x0F	page 19	0x00	RW
Transmit SERDES Valid	REG_TX_VALID	0x10	page 19	0x00	RW
PN Code	REG_PN_CODE	0x18–0x11	page 19	0x1E8B6A3DE0E9B2 22	RW
Threshold Low	REG_THRESHOLD_L	0x19[3]	page 20	0x08	RW
Threshold High	REG_THRESHOLD_H	0x1A[3]	page 20	0x38	RW
Wake Enable	REG_WAKE_EN	0x1C	page 20	0x00	RW
Wake Status	REG_WAKE_STAT	0x1D	page 21	0x01	RO
Analog Control	REG_ANALOG_CTL	0x20	page 21	0x04	RW
Channel	REG_CHANNEL	0x21	page 22	0x00	RW
Receive Signal Strength Indicator	REG_RSSI	0x22[3]	page 22	0x00	RO
PA Bias	REG_PA	0x23	page 22	0x00	RW
Crystal Adjust	REG_CRYSTAL_ADJ	0x24	page 23	0x00	RW
VCO Calibration	REG_VCO_CAL	0x26	page 23	0x00	RW
Reg Power Control	REG_PWR_CTL	0x2E	23	0x00	RW
Carrier Detect	REG_CARRIER_DETECT	0x2F	page 24	0x00	RW
Clock Manual	REG_CLOCK_MANUAL	0x32	page 24	0x00	RW
Clock Enable	REG_CLOCK_ENABLE	0x33	page 24	0x00	RW
Synthesizer Lock Count	REG_SYN_LOCK_CNT	0x38	page 24	0x64	RW
Manufacturing ID	REG_MID	0x3C–0x3F	page 25	–	RO

Not Recommended for New Designs

Notes
2. All registers are accessed Little Endian.
3. Register not applicable to CYWUSB6932.

Downloaded from Arrow.com.

Table 4. Revision ID Register

Addr: 0x00				REG_ID			Default: 0x07
7	6	5	4	3	2	1	0
Silicon ID				Product ID			

Bit	Name	Description
7:4	Silicon ID	These are the Silicon ID revision bits. 0000 = Rev A, 0001 = Rev B, etc. These bits are read-only.
3:0	Product ID	These are the Product ID revision bits. Fixed at value 0111. These bits are read-only.

Table 5. Control

Addr: 0x03				REG_CONTROL			Default: 0x00
7	6	5	4	3	2	1	0
RX Enable	TX Enable	PN Code Select	Bypass Internal Syn Lock Signal	Auto Internal PA Disable	Internal PA Enable	Reserved	Reserved

Bit	Name	Description
7	RX Enable	The Receive Enable bit is used to place the IC in receive mode. 1 = Receive Enabled 0 = Receive Disabled
6	TX Enable	The Transmit Enable bit is used to place the IC in transmit mode. 1 = Transmit Enabled 0 = Transmit Disabled
5	PN Code Select	The Pseudo-Noise Code Select bit selects between the upper or lower half of the 64 chips/bit PN code. 1 = 32 Most Significant Bits of PN code are used 0 = 32 Least Significant Bits of PN code are used This bit applies only when the Code Width bit is set to 32 chips/bit PN codes (Reg 0x04, bit 2=1).
4	Bypass Internal Syn Lock Signal	This bit controls whether the state machine waits for the internal Syn Lock Signal before waiting for the amount of time specified in the Syn Lock Count register (Reg 0x38), in units of 2 µs. If the internal Syn Lock Signal is used then set Syn Lock Count to 25 to provide additional assurance that the synthesizer has settled. 1 = Bypass the Internal Syn Lock Signal and wait the amount of time in Syn Lock Count register (Reg 0x38) 0 = Wait for the Syn Lock Signal and then wait the amount of time specified in Syn Lock Count register (Reg 0x38) It is recommended that the application MCU sets this bit to 1 in order to guarantee a consistent settle time for the synthesizer.
3	Auto Internal PA Disable	The Auto Internal PA Disable bit is used to determine the method of controlling the Internal Power Amplifier. The two options are automatic control by the baseband or by firmware through register writes. For external PA usage, please see the description of the REG_ANALOG_CTL register (Reg 0x20). 1 = Register controlled Internal PA Enable 0 = Auto controlled Internal PA Enable When this bit is set to 1, the enabled state of the Internal PA is directly controlled by bit Internal PA Enable (Reg 0x03, bit 2). It is recommended that this bit is set to 0, leaving the PA control to the baseband.
2	Internal PA Enable	The Internal PA Enable bit is used to enable or disable the Internal Power Amplifier. 1 = Internal Power Amplifier Enabled 0 = Internal Power Amplifier Disabled This bit only applies when the Auto Internal PA Disable bit is selected (Reg 0x03, bit 3=1), otherwise this bit is don't care.
1	Reserved	This bit is reserved and should be written with a zero.
0	Reserved	This bit is reserved and should be written with a zero.

Not Recommended for New Designs

Downloaded from Arrow.com.

Table 6. Data Rate

Addr: 0x04			REG_DATA_RATE			Default: 0x00	
7	6	5	4	3	2	1	0
Reserved					Code Width	Data Rate	Sample Rate

Bit	Name	Description
7:3	Reserved	These bits are reserved and should be written with zeroes.
2[4]	Code Width	The Code Width bit is used to select between 32 chips/bit and 64 chips/bit PN codes. 1 = 32 chips/bit PN codes 0 = 64 chips/bit PN codes The number of chips/bit used impacts a number of factors such as data throughput, range and robustness to interference. By choosing a 32 chips/bit PN-code, the data throughput can be doubled or even quadrupled (when double data rate is set). A 64 chips/bit PN code offers improved range over its 32 chips/bit counterpart as well as more robustness to interference. By selecting to use a 32 chips/bit PN code a number of other register bits are impacted and need to be addressed. These are PN Code Select (Reg 0x03, bit 5), Data Rate (Reg 0x04, bit 1), and Sample Rate (Reg 0x04, bit 0).
1[4]	Data Rate	The Data Rate bit allows the user to select Double Data Rate mode of operation which delivers a raw data rate of 62.5 kbits/sec. 1 = Double Data Rate - 2 bits per PN code (No odd bit transmissions) 0 = Normal Data Rate - 1 bit per PN code This bit is applicable only when using 32 chips/bit PN codes which can be selected by setting the Code Width bit (Reg 0x04, bit 2=1). When using Double Data Rate, the raw data throughput is 62.5 kbits/sec because every 32 chips/bit PN code is interpreted as 2 bits of data. When using this mode a single 64 chips/bit PN code is placed in the PN code register. This 64 chips/bit PN code is then split into two and used by the baseband to offer the Double Data Rate capability. When using Normal Data Rate, the raw data throughput is 32kbits/sec. Additionally, Normal Data Rate enables the user to potentially correlate data using two differing 32 chips/bit PN codes.
0[4]	Sample Rate	The Sample Rate bit allows the use of the 12x sampling when using 32 chips/bit PN codes and Normal Data Rate. 1 = 12x Oversampling 0 = 6x Oversampling Using 12x oversampling improves the correlators receive sensitivity. When using 64 chips/bit PN codes or Double Data Rate this bit is don't care. The only time when 12x oversampling can be selected is when a 32 chips/bit PN code is being used with Normal Data Rate.

Not Recommended for New Designs

Table 7. Configuration

Addr: 0x05			REG_CONFIG			Default: 0x01	
7	6	5	4	3	2	1	0
Reserved						IRQ Pin Select	

Bit	Name	Description
7:2	Reserved	These bits are reserved and should be written with zeroes.
1:0	IRQ Pin Select	The Interrupt Request Pin Select bits are used to determine the drive method of the IRQ pin. 11 = Open Source (IRQ asserted = 1, IRQ deasserted = Hi-Z) 10 = Open Drain (IRQ asserted = 0, IRQ deasserted = Hi-Z) 01 = CMOS (IRQ asserted = 1, IRQ deasserted = 0) 00 = CMOS Inverted (IRQ asserted = 0, IRQ deasserted = 1)

Note

4. The following Reg 0x04, bits 2:0 values are not valid:
   - 001 – Not Valid
   - 010 – Not Valid
   - 011 – Not Valid
   - 111 – Not Valid.

Downloaded from Arrow.com.

Table 8. SERDES Control

Addr: 0x06				REG_SERDES_CTL			Default: 0x03
7	6	5	4	3	2	1	0
Reserved				SERDES Enable	EOF Length		

Bit	Name	Description
7:4	Reserved	These bits are reserved and should be written with zeroes.
3	SERDES Enable	The SERDES Enable bit is used to switch between bit-serial mode and SERDES mode. 1 = SERDES enabled. 0 = SERDES disabled, bit-serial mode enabled. When the SERDES is enabled data can be written to and read from the IC one byte at a time, through the use of the SERDES Data registers. The bit-serial mode requires bits to be written one bit at a time through the use of the DIO/DIOVAL pins, refer to section 3.2. It is recommended that SERDES mode be used to avoid the need to manage the timing required by the bit-serial mode.
2:0	EOF Length	The End of Frame Length bits are used to set the number of sequential bit times for an inter-frame gap without valid data before an EOF event will be generated. When in receive mode and a valid bit has been received the EOF event can then be identified by the number of bit times that expire without correlating any new data. The EOF event causes data to be moved to the proper SERDES Data Register and can also be used to generate interrupts. If 0 is the EOF length, an EOF condition will occur at the first invalid bit after a valid reception.

Not Recommended for New Designs

Downloaded from Arrow.com.

Table 9. Receive SERDES Interrupt Enable

Addr: 0x07			REG_RX_INT_EN				Default: 0x00
7	6	5	4	3	2	1	0
Underflow B	Overflow B	EOF B	Full B	Underflow A	Overflow A	EOF A	Full A

Bit	Name	Description
7	Underflow B	The Underflow B bit is used to enable the interrupt associated with an underflow condition with the Receive SERDES Data B register (Reg 0x0B) 1 = Underflow B interrupt enabled for Receive SERDES Data B 0 = Underflow B interrupt disabled for Receive SERDES Data B An underflow condition occurs when attempting to read the Receive SERDES Data B register (Reg 0x0B) when it is empty.
6	Overflow B	The Overflow B bit is used to enable the interrupt associated with an overflow condition with the Receive SERDES Data B register (Reg 0x0B) 1 = Overflow B interrupt enabled for Receive SERDES Data B 0 = Overflow B interrupt disabled for Receive SERDES Data B An overflow condition occurs when new received data is written into the Receive SERDES Data B register (Reg 0x0B) before the prior data is read out.
5	EOF B	The End of Frame B bit is used to enable the interrupt associated with the Channel B Receiver EOF condition. 1 = EOF B interrupt enabled for Channel B Receiver. 0 = EOF B interrupt disabled for Channel B Receiver. The EOF IRQ asserts during an End of Frame condition. End of Frame conditions occur after at least one bit has been detected, and then the number of invalid bits in the frame exceeds the number in the EOF length field. If 0 is the EOF length, and EOF condition will occur at the first invalid bit after a valid reception. This IRQ is cleared by reading the receive status register.
4	Full B	The Full B bit is used to enable the interrupt associated with the Receive SERDES Data B register (Reg 0x0B) having data placed in it. 1 = Full B interrupt enabled for Receive SERDES Data B 0 = Full B interrupt disabled for Receive SERDES Data B A Full B condition occurs when data is transferred from the Channel B Receiver into the Receive SERDES Data B register (Reg 0x0B). This could occur when a complete byte is received or when an EOF event occurs whether or not a complete byte has been received.
3	Underflow A	The Underflow A bit is used to enable the interrupt associated with an underflow condition with the Receive SERDES Data A register (Reg 0x09) 1 = Underflow A interrupt enabled for Receive SERDES Data A 0 = Underflow A interrupt disabled for Receive SERDES Data A An underflow condition occurs when attempting to read the Receive SERDES Data A register (Reg 0x09) when it is empty.
2	Overflow A	The Overflow A bit is used to enable the interrupt associated with an overflow condition with the Receive SERDES Data A register (0x09) 1 = Overflow A interrupt enabled for Receive SERDES Data A 0 = Overflow A interrupt disabled for Receive SERDES Data A An overflow condition occurs when new receive data is written into the Receive SERDES Data A register (Reg 0x09) before the prior data is read out.
1	EOF A	The End of Frame A bit is used to enable the interrupt associated with an End of Frame condition with the Channel A Receiver. 1 = EOF A interrupt enabled for Channel A Receiver. 0 = EOF A interrupt disabled for Channel A Receiver. The EOF IRQ asserts during an End of Frame condition. End of Frame conditions occur after at least one bit has been detected, and then the number of invalid bits in a frame exceeds the number in the EOF length field. If 0 is the EOF length, an EOF condition will occur at the first invalid bit after a valid reception. This IRQ is cleared by reading the receive status register.

Not Recommended for New Designs

Downloaded from Arrow.com.

Bit	Name	Description
0	Full A	The Full A bit is used to enable the interrupt associated with the Receive SERDES Data A register (0x09) having data written into it. 1 = Full A interrupt enabled for Receive SERDES Data A 0 = Full A interrupt disabled for Receive SERDES Data A A Full A condition occurs when data is transferred from the Channel A Receiver into the Receive SERDES Data A register (Reg 0x09). This could occur when a complete byte is received or when an EOF event occurs whether or not a complete byte has been received.

Table 10. Receive SERDES Interrupt Status[5]

Addr: 0x08			REG_RX_INT_STAT				Default: 0x00
7	6	5	4	3	2	1	0
Valid B	Flow Violation B	EOF B	Full B	Valid A	Flow Violation A	EOF A	Full A

Not Recommended for New Designs

Note
5. All status bits are set and readable in the registers regardless of IRQ enable status. This allows a polling scheme to be implemented without enabling IRQs. The status bits are affected by TX Enable and RX Enable (Reg 0x03, bits 7:6). For example, the receive status will read 0 if the IC is not in receive mode. These registers are read-only.

Downloaded from Arrow.com.

Bit	Name	Description
7	Valid B	The Valid B bit is true when all the bits in the Receive SERDES Data B register (Reg 0x0B) are valid. 1 = All bits are valid for Receive SERDES Data B. 0 = Not all bits are valid for Receive SERDES Data B. When data is written into the Receive SERDES Data B register (Reg 0x0B) this bit is set if all of the bits within the byte that has been written are valid. This bit cannot generate an interrupt.
6	Flow Violation B	The Flow Violation B bit is used to signal whether an overflow or underflow condition has occurred for the Receive SERDES Data B register (Reg 0x0B). 1 = Overflow/underflow interrupt pending for Receive SERDES Data B. 0 = No overflow/underflow interrupt pending for Receive SERDES Data B. Overflow conditions occur when the radio loads new data into the Receive SERDES Data B register (Reg 0x0B) before the prior data has been read. Underflow conditions occur when trying to read the Receive SERDES Data B register (Reg 0x0B) when the register is empty. This bit is cleared by reading the Receive Interrupt Status register (Reg 0x08)
5	EOF B	The End of Frame B bit is used to signal whether an EOF event has occurred on the Channel B receive. 1 = EOF interrupt pending for Channel B. 0 = No EOF interrupt pending for Channel B. An EOF condition occurs for the Channel B Receiver when receive has begun and then the number of bit times specified in the SERDES Control register (Reg 0x06) elapse without any valid bits being received. This bit is cleared by reading the Receive Interrupt Status register (Reg 0x08)
4	Full B	The Full B bit is used to signal when the Receive SERDES Data B register (Reg 0x0B) is filled with data. 1 = Receive SERDES Data B full interrupt pending. 0 = No Receive SERDES Data B full interrupt pending. A Full B condition occurs when data is transferred from the Channel B Receiver into the Receive SERDES Data B register (Reg 0x0B). This could occur when a complete byte is received or when an EOF event occurs whether or not a complete byte has been received.
3	Valid A	The Valid A bit is true when all of the bits in the Receive SERDES Data A Register (Reg 0x09) are valid. 1 = All bits are valid for Receive SERDES Data A. 0 = Not all bits are valid for Receive SERDES Data A. When data is written into the Receive SERDES Data A register (Reg 0x09) this bit is set if all of the bits within the byte that has been written are valid. This bit cannot generate an interrupt.
2	Flow Violation A	The Flow Violation A bit is used to signal whether an overflow or underflow condition has occurred for the Receive SERDES Data A register (Reg 0x09). 1 = Overflow/underflow interrupt pending for Receive SERDES Data A. 0 = No overflow/underflow interrupt pending for Receive SERDES Data A. Overflow conditions occur when the radio loads new data into the Receive SERDES Data A register (Reg 0x09) before the prior data has been read. Underflow conditions occur when trying to read the Receive SERDES Data A register (Reg 0x09) when the register is empty. This bit is cleared by reading the Receive Interrupt Status register (Reg 0x08)
1	EOF A	The End of Frame A bit is used to signal whether an EOF event has occurred on the Channel A receive. 1 = EOF interrupt pending for Channel A. 0 = No EOF interrupt pending for Channel A. An EOF condition occurs for the Channel A Receiver when receive has begun and then the number of bit times specified in the SERDES Control register (0x06) elapse without any valid bits being received. This bit is cleared by reading the Receive Interrupt Status register (Reg 0x08).
0	Full A	The Full A bit is used to signal when the Receive SERDES Data A register (Reg 0x09) is filled with data. 1 = Receive SERDES Data A full interrupt pending. 0 = No Receive SERDES Data A full interrupt pending. A Full A condition occurs when data is transferred from the Channel A Receiver into the Receive SERDES Data A Register (Reg 0x09). This could occur when a complete byte is received or when an EOF event occurs whether or not a complete byte has been received.

Not Recommended for New Designs

Downloaded from Arrow.com.

Table 11. Receive SERDES Data A

Addr: 0x09			REG_RX_DATA_A				Default: 0x00
7	6	5	4	3	2	1	0
Data							

Bit	Name	Description
7:0	Data	Received Data for Channel A. The over-the-air received order is bit 0 followed by bit 1, followed by bit 2, followed by bit 3, followed by bit 4, followed by bit 5, followed by bit 6, followed by bit 7. This register is read-only.

Table 12. Receive SERDES Valid A

Addr: 0x0A			REG_RX_VALID_A				Default: 0x00
7	6	5	4	3	2	1	0
Valid							

Bit	Name	Description
7:0	Valid	These bits indicate which of the bits in the Receive SERDES Data A register (Reg 0x09) are valid. A “1” indicates that the corresponding data bit is valid for Channel A. If the Valid Data bit is set in the Receive Interrupt Status register (Reg 0x08) all eight bits in the Receive SERDES Data A register (Reg 0x0A) are valid. Therefore, it is not necessary to read the Receive SERDES Valid A register (Reg 0x0C). This register is read-only.

Figure 9. Receive SERDES Data B

Addr: 0x0B			REG_RX_DATA_B				Default: 0x00
7	6	5	4	3	2	1	0
Data							

Bit	Name	Description
7:0	Data	Received Data for Channel B. The over-the-air received order is bit 0 followed by bit 1, followed by bit 2, followed by bit 3, followed by bit 4, followed by bit 5, followed by bit 6, followed by bit 7. This register is read-only.

Not Recommended for New Designs

Downloaded from Arrow.com.

Table 13. Receive SERDES Valid B

Addr: 0x0C			REG_RX_VALID_B				Default: 0x00
7	6	5	4	3	2	1	0
Valid							

Bit	Name	Description
7:0	Valid	These bits indicate which of the bits in the Receive SERDES Data B register (Reg 0x0B) are valid. A “1” indicates that the corresponding data bit is valid for Channel B. If the Valid Data bit is set in the Receive Interrupt Status register (0x08) all eight bits in the Receive SERDES Data B register (Reg 0x0B) are valid. Therefore, it is not necessary to read the Receive SERDES Valid B register (Reg 0x0C). This register is read-only.

Table 14. Transmit SERDES Interrupt Enable

Addr: 0x0D			REG_TX_INT_EN				Default: 0x00
7	6	5	4	3	2	1	0
Reserved				Underflow	Overflow	Done	Empty

Bit	Name	Description
7:4	Reserved	These bits are reserved and should be written with zeroes.
3	Underflow	The Underflow bit is used to enable the interrupt associated with an underflow condition associated with the Transmit SERDES Data register (Reg 0x0F). 1 = Underflow interrupt enabled. 0 = Underflow interrupt disabled. An underflow condition occurs when attempting to transmit while the Transmit SERDES Data register (Reg 0x0F) does not have any data.
2	Overflow	The Overflow bit is used to enabled the interrupt associated with an overflow condition with the Transmit SERDES Data register (0x0F). 1 = Overflow interrupt enabled. 0 = Overflow interrupt disabled. An overflow condition occurs when attempting to write new data to the Transmit SERDES Data register (Reg 0x0F) before the preceding data has been transferred to the transmit shift register.
1	Done	The Done bit is used to enable the interrupt that signals the end of the transmission of data. 1 = Done interrupt enabled. 0 = Done interrupt disabled. The Done condition occurs when the Transmit SERDES Data register (Reg 0x0F) has transmitted all of its data and there is no more data for it to transmit.
0	Empty	The Empty bit is used to enable the interrupt that signals when the Transmit SERDES register (Reg 0x0F) is empty. 1 = Empty interrupt enabled. 0 = Empty interrupt disabled. The Empty condition occurs when the Transmit SERDES Data register (Reg 0x0F) is loaded into the transmit buffer and it's safe to load the next byte

Not Recommended for New Designs

Downloaded from Arrow.com.

Table 15. Transmit SERDES Interrupt Status[6]

Addr: 0x0E			REG_TX_INT_STAT				Default: 0x00
7	6	5	4	3	2	1	0
Reserved				Underflow	Overflow	Done	Empty

Bit	Name	Description
7:4	Reserved	These bits are reserved. This register is read-only.
3	Underflow	The Underflow bit is used to signal when an underflow condition associated with the Transmit SERDES Data register (Reg 0x0F) has occurred. 1 = Underflow Interrupt pending. 0 = No Underflow Interrupt pending. This IRQ will assert during an underflow condition to the Transmit SERDES Data register (Reg 0x0F). An underflow occurs when the transmitter is ready to sample transmit data, but there is no data ready in the Transmit SERDES Data register (Reg 0x0F). This will only assert after the transmitter has transmitted at least one bit. This bit is cleared by reading the Transmit Interrupt Status register (Reg 0x0E).
2	Overflow	The Overflow bit is used to signal when an overflow condition associated with the Transmit SERDES Data register (0x0F) has occurred. 1 = Overflow Interrupt pending. 0 = No Overflow Interrupt pending. This IRQ will assert during an overflow condition to the Transmit SERDES Data register (Reg 0x0F). An overflow occurs when the new data is loaded into the Transmit SERDES Data register (Reg 0x0F) before the previous data has been sent. This bit is cleared by reading the Transmit Interrupt Status register (Reg 0x0E).
1	Done	The Done bit is used to signal the end of a data transmission. 1 = Done Interrupt pending. 0 = No Done Interrupt pending. This IRQ will assert when the data is finished sending a byte of data and there is no more data to be sent. This will only assert after the transmitter has transmitted as least one bit. This bit is cleared by reading the Transmit Interrupt Status register (Reg 0x0E)
0	Empty	The Empty bit is used to signal when the Transmit SERDES Data register (Reg 0x0F) has been emptied. 1 = Empty Interrupt pending. 0 = No Empty Interrupt pending. This IRQ will assert when the transmit serdes is empty. When this IRQ is asserted it is ok to write to the Transmit SERDES Data register (Reg 0x0F). Writing the Transmit SERDES Data register (Reg 0x0F) will clear this IRQ. It will be set when the data is loaded into the transmitter, and it is ok to write new data.

Not Recommended for New Designs

Note
6. All status bits are set and readable in the registers regardless of IRQ enable status. This allows a polling scheme to be implemented without enabling IRQs. The status bits are affected by the TX Enable and RX Enable (Reg 0x03, bits 7:6). For example, the transmit status will read 0 if the IC is not in transmit mode. These registers are read-only.

Downloaded from Arrow.com.

Table 16. Transmit SERDES Data

Addr: 0x0F			REG_TX_DATA				Default: 0x00
7	6	5	4	3	2	1	0
Data							

Bit	Name	Description
7:0	Data	Transmit Data. The over-the-air transmitted order is bit 0 followed by bit 1, followed by bit 2, followed by bit 3, followed by bit 4, followed by bit 5, followed by bit 6, followed by bit 7.

Table 17. Transmit SERDES Valid

Addr: 0x10			REG_TX_VALID				Default: 0x00
7	6	5	4	3	2	1	0
Valid							

Bit	Name	Description
7:0	Valid[7]	The Valid bits are used to determine which of the bits in the Transmit SERDES Data register (reg 0x0F) are valid. 1 = Valid transmit bit. 0 = Invalid transmit bit.

Table 18. PN Code

Addr: 0x11-18																REG_PN_CODE								Default: 0x1E8B6A3DE0E9B222							
63	62	61	60	59	58	57	56	55	54	53	52	51	50	49	48	47	46	45	44	43	42	41	40	39	38	37	36	35	34	33	32
Address 0x18								Address 0x17								Address 0x16								Address 0x15							

31	30	29	28	27	26	25	24	23	22	21	20	19	18	17	16	15	14	13	12	11	10	9	8	7	6	5	4	3	2	1	0
Address 0x14								Address 0x13								Address 0x12								Address 0x11							

Bit	Name	Description
63:0	PN Codes	The value inside the 8 byte PN code register is used as the spreading code for DSSS communication. All 8 bytes can be used together for 64 chips/bit PN code communication, or the registers can be split into two sets of 32 chips/bit PN codes and these can be used alone or with each other to accomplish faster data rates. Not any 64 chips/bit value can be used as a PN code as there are certain characteristics that are needed to minimize the possibility of multiple PN codes interfering with each other or the possibility of invalid correlation. The over-the-air order is bit 0 followed by bit 1... followed by bit 62, followed by bit 63.

Note

7. The Valid bit in the Transmit SERDES Valid register (Reg 0x10) is used to mark whether the radio will send data or preamble during that bit time of the data byte. Data is sent LSB first. The SERDES will continue to send data until there are no more VALID bits in the shifter. For example, writing 0x0F to the Transmit SERDES Valid register (Reg 0x10) will send half a byte.

Not Recommended for New Designs

Downloaded from Arrow.com.

Table 19. Threshold Low

Addr: 0x19			REG_THRESHOLD_L				Default: 0x08
7	6	5	4	3	2	1	0
Reserved	Threshold Low						

Bit	Name	Description
7	Reserved	This bit is reserved and should be written with zero.
6:0	Threshold Low	The Threshold Low value is used to determine the number of missed chips allowed when attempting to correlate a single data bit of value '0'. A perfect reception of a data bit of '0' with a 64 chips/bit PN code would result in zero correlation matches, meaning the exact inverse of the PN code has been received. By setting the Threshold Low value to 0x08 for example, up to eight chips can be erroneous while still identifying the value of the received data bit. This value along with the Threshold High value determine the correlator count values for logic '1' and logic '0'. The threshold values used determine the sensitivity of the receiver to interference and the dependability of the received data. By allowing a minimal number of erroneous chips the dependability of the received data increases while the robustness to interference decreases. On the other hand increasing the maximum number of missed chips means reduced data integrity but increased robustness to interference and increased range.

Table 20. Threshold High

Addr: 0x1A			REG_THRESHOLD_H				Default: 0x38
7	6	5	4	3	2	1	0
Reserved	Threshold High						

Bit	Name	Description
7	Reserved	This bit is reserved and should be written with zero.
6:0	Threshold High	The Threshold High value is used to determine the number of matched chips allowed when attempting to correlate a single data bit of value '1'. A perfect reception of a data bit of '1' with a 64 chips/bit or a 32 chips/bit PN code would result in 64 chips/bit or 32 chips/bit correlation matches, respectively, meaning every bit was received perfectly. By setting the Threshold High value to 0x38 (64-8) for example, up to eight chips can be erroneous while still identifying the value of the received data bit. This value along with the Threshold Low value determine the correlator count values for logic '1' and logic '0'. The threshold values used determine the sensitivity of the receiver to interference and the dependability of the received data. By allowing a minimal number of erroneous chips the dependability of the received data increases while the robustness to interference decreases. On the other hand increasing the maximum number of missed chips means reduced data integrity but increased robustness to interference and increased range.

Table 21. Wake Enable

Addr: 0x1C			REG_WAKE_EN				Default: 0x00
7	6	5	4	3	2	1	0
Reserved							Wakeup Enable

Bit	Name	Description
7:1	Reserved	These bits are reserved and should be written with zeroes.
0	Wakeup Enable	Wakeup interrupt enable. 0 = disabled 1 = enabled A wakeup event is triggered when the $\overline{PD}$ pin is deasserted and once the IC is ready to receive SPI communications.

Not Recommended for New Designs

Downloaded from Arrow.com.

Table 22. Wake Status

Addr: 0x1D			REG_WAKE_STAT				Default: 0x01
7	6	5	4	3	2	1	0
Reserved							Wakeup Status

Bit	Name	Description
7:1	Reserved	These bits are reserved. This register is read-only.
0	Wakeup Status	Wakeup status. 0 = Wake interrupt not pending 1 = Wake interrupt pending This IRQ will assert when a wakeup condition occurs. This bit is cleared by reading the Wake Status register (Reg 0x1D). This register is read-only.

Table 23. Analog Control

Addr: 0x20			REG_ANALOG_CTL				Default: 0x00
7	6	5	4	3	2	1	0
Reserved	Reg Write Control	MID Read Enable	Reserved	Reserved	PA Output Enable	PA Invert	Reset

Bit	Name	Description
7	Reserved	This bit is reserved and should be written with zero.
6	Reg Write Control	Enables write access to Reg 0x2E and Reg 0x2F. 1 = Enables write access to Reg 0x2E and Reg 0x2F 0 = Reg 0x2E and Reg 0x2F are read-only
5	MID Read Enable	The MID Read Enable bit must be set to read the contents of the Manufacturing ID register (Reg 0x3C-0x3F). Enabling the Manufacturing ID register (Reg 0x3C-0x3F) consumes power. This bit should only be set when reading the contents of the Manufacturing ID register (Reg 0x3C-0x3F). 1 = Enables read of MID registers 0 = Disables read of MID registers
4:3	Reserved	These bits are reserved and should be written with zeroes.
2	PA Output Enable	The Power Amplifier Output Enable bit is used to enable the PACTL pin for control of an external power amplifier. 1 = PA Control Output Enabled on PACTL pin 0 = PA Control Output Disabled on PACTL pin
1	PA Invert	The Power Amplifier Invert bit is used to specify the polarity of the PACTL signal when the PA Output Enable bit is set high. PA Output Enable and PA Invert cannot be simultaneously changed. 1 = PACTL active low 0 = PACTL active high
0	Reset	The Reset bit is used to generate a self-clearing device reset. 1 = Device Reset. All registers are restored to their default values. 0 = No Device Reset.

Not Recommended for New Designs

Downloaded from Arrow.com.

Table 24. Channel

Addr: 0x21			REG_CHANNEL				Default: 0x00
7	6	5	4	3	2	1	0
Reserved	Channel						

Bit	Name	Description
7	Reserved	This bit is reserved and should be written with zero.
6:0	Channel	The Channel register (Reg 0x21) is used to determine the Synthesizer frequency. A value of 2 corresponds to a communication frequency of 2.402 GHz, while a value of 79 corresponds to a frequency of 2.479GHz. The channels are separated from each other by 1 MHz intervals. Limit application usage to channels 2-79 to adhere to FCC regulations. FCC regulations require that channels 0 and 1 and any channel greater than 79 be avoided. Use of other channels may be restricted by other regulatory agencies. The application MCU must ensure that this register is modified before transmitting data over the air for the first time.

Table 25. Receive Signal Strength Indicator (RSSI)[8]

Addr: 0x22			REG_RSSI				Default: 0x00
7	6	5	4	3	2	1	0
Reserved		Valid	RSSI				

Bit	Name	Description
7:6	Reserved	These bits are reserved. This register is read-only.
5	Valid	The Valid bit indicates whether the RSSI value in bits [4:0] are valid. This register is Read Only. 1 = RSSI value is valid 0 = RSSI value is invalid
4:0	RSSI	The Receive Strength Signal Indicator (RSSI) value indicates the strength of the received signal. This is a read only value with the higher values indicating stronger received signals meaning more reliable transmissions.

Table 26. PA Bias

Addr: 0x23			REG_PA				Default: 0x00
7	6	5	4	3	2	1	0
Reserved					PA Bias		

Bit	Name	Description
7:3	Reserved	These bits are reserved and should be written with zeroes.
2:0	PA Bias	The Power Amplifier Bias (PA Bias) bits are used to set the transmit power of the IC through increasing (values up to 7) or decreasing (values down to 0) the gain of the on-chip Power Amplifier. The higher the register value the higher the transmit power. By changing the PA Bias value signal strength management functions can be accomplished. For general purpose communication a value of 7 is recommended.

Not Recommended for New Designs

Note
8. The RSSI will collect a single value each time the part is put into receive mode via Control register (Reg 0x03, bit 7=1). See *Section* for more details.

Downloaded from Arrow.com.

Table 27. Crystal Adjust

Addr: 0x24		REG_CRYSTAL_ADJ					Default: 0x00
7	6	5	4	3	2	1	0
Reserved	Clock Output Disable	Crystal Adjust					

Bit	Name	Description
7	Reserved	This bit is reserved and should be written with zero.
6	Clock Output Disable	The Clock Output Disable bit disables the 13 MHz clock driven on the X13OUT pin. 1 = No 13-MHz clock driven externally. 0 = 13-MHz clock driven externally. If the 13-MHz clock is driven on the X13OUT pin then receive sensitivity will be reduced by –4 dBm on channels 5+13*n*. By default the 13-MHz clock output pin is enabled. This pin is useful for adjusting the 13-MHz clock, but it interfere with every 13th channel beginning with 2.405GHz channel. Therefore, it is recommended that the 13-MHz clock output pin be disabled when not in use.
5:0	Crystal Adjust	The Crystal Adjust value is used to calibrate the on-chip parallel load capacitance supplied to the crystal. Each increment of the Crystal Adjust value typically adds 0.135 pF of parallel load capacitance. The total range is 8.5 pF, starting at 8.65 pF. These numbers do not include PCB parasitics, which can add an additional 1–2 pF.

Table 28. VCO Calibration

Addr: 0x26		REG_VCO_CAL					Default: 0x00
7	6	5	4	3	2	1	0
VCO Slope Enable		Reserved					

Bit	Name	Description
7:6	VCO Slope Enable (Write-Only)	The Voltage Controlled Oscillator (VCO) Slope Enable bits are used to specify the amount of variance automatically added to the VCO. 11 = –5/+5 VCO adjust. The application MCU must configure this option during initialization. 10 = –2/+3 VCO adjust. 01 = Reserved. 00 = No VCO adjust. These bits are undefined for read operations.
5:0	Reserved	These bits are reserved and should be written with zeroes.

Table 29. Reg Power Control

Addr: 0x2E		REG_PWR_CTL					Default: 0x00
7	6	5	4	3	2	1	0
Reg Power Control	Reserved						

Bit	Name	Description
7	Reg Power Control	When set, this bit disables unused circuitry and saves radio power. The user must set Reg 0x20, bit 6=1 to enable writes to Reg 0x2E. The application MCU must set this bit during initialization.
6:0	Reserved	These bits are reserved and should be written with zeroes.

Not Recommended for New Designs

Downloaded from Arrow.com.

Table 30. Carrier Detect

Addr: 0x2F			REG_CARRIER_DETECT				Default: 0x00
7	6	5	4	3	2	1	0
Carrier Detect Override	Reserved						

Bit	Name	Description
7	Carrier Detect Override	When set, this bit overrides carrier detect. The user must set Reg 0x20, bit 6=1 to enable writes to Reg 0x2F.
6:0	Reserved	These bits are reserved and should be written with zeroes.

Table 31. Clock Manual

Addr: 0x32			REG_CLOCK_MANUAL				Default: 0x00
7	6	5	4	3	2	1	0
Manual Clock Overrides							

Bit	Name	Description
7:0	Manual Clock Overrides	This register must be written with 0x41 after reset for correct operation

Table 32. Clock Enable

Addr: 0x33			REG_CLOCK_ENABLE				Default: 0x00
7	6	5	4	3	2	1	0
Manual Clock Enables							

Bit	Name	Description
7:0	Manual Clock Enables	This register must be written with 0x41 after reset for correct operation

Table 33. Synthesizer Lock Count

Addr: 0x38			REG_SYN_LOCK_CNT				Default: 0x64
7	6	5	4	3	2	1	0
Count							

Bit	Name	Description
7:0	Count	Determines the length of delay in 2µs increments for the synthesizer to lock when auto synthesizer is enabled via Control register (0x03, bit 1=0) and not using the PLL lock signal. The default register setting is typically sufficient.

Not Recommended for New Designs

Downloaded from Arrow.com.

Table 34. Manufacturing ID

Addr: 0x3C-3F																REG_MID															
31	30	29	28	27	26	25	24	23	22	21	20	19	18	17	16	15	14	13	12	11	10	9	8	7	6	5	4	3	2	1	0
Address 0x3F								Address 0x3E								Address 0x3D								Address 0x3C							

Bit	Name	Description
31:30	Address[31:30]	These bits are read back as zeroes.
29:0	Address[29:0]	These bits are the Manufacturing ID (MID) for each IC. The contents of these bits cannot be read unless the MID Read Enable bit (bit 5) is set in the Analog Control register (Reg 0x20). Enabling the Manufacturing ID register (Reg 0x3C-0x3F) consumes power. The MID Read Enable bit in the Analog Control register (Reg 0x20, bit 5) should only be set when reading the contents of the Manufacturing ID register (Reg 0x3C-0x3F). This register is read-only.

Not Recommended for New Designs

Downloaded from Arrow.com.

Pin Definitions

Table 35. Pin Description Table for the CYWUSB6932/CYWUSB6934

Pin QFN	Name	Type	Default	Description
46	RFIN	Input	Input	RF Input. Modulated RF signal received (CYWUSB6934 only).
5	RFOUT	Output	N/A	RF Output. Modulated RF signal to be transmitted.
38	X13	Input	N/A	Crystal Input. (refer to "Clocking and Power Management" on page 4).
35	X13IN	Input	N/A	Crystal Input. (refer to "Clocking and Power Management" on page 4).
26	X13OUT	Output/Hi-Z	Output	System Clock. Buffered 13-MHz system clock.
33	$\overline{PD}$	Input	N/A	Power Down. Asserting this input (low), will put the CYWUSB6932/CYWUSB6934 in the Suspend Mode (X13OUT is 0 when $\overline{PD}$ is low).
14	$\overline{RESET}$	Input	N/A	Active LOW Reset. Device reset.
34	PACTL	I/O	Input	PACTL. External Power Amplifier control. Pull-down or make output.
20	DIO	I/O	Input	Data Input/Output. SERDES Bypass Mode Data Transmit/Receive.
19	DIOVAL	I/O	Input	Data I/O Valid. SERDES Bypass Mode Data Transmit/Receive Valid.
21	IRQ	Output /Hi-Z	Output	IRQ. Interrupt and SERDES Bypass Mode DIOCLK.
23	MOSI	Input	N/A	Master-Output-Slave-Input Data. SPI data input pin.
24	MISO	Output/Hi-Z	Hi-Z	Master-Input-Slave-Output Data. SPI data output pin.
25	SCK	Input	N/A	SPI Input Clock. SPI clock.
22	$\overline{SS}$	Input	N/A	Slave Select Enable. SPI enable.
6, 9, 16, 28, 29, 32, 41, 42, 44, 45	VCC	VCC	H	V_{CC} = 2.7 V to 3.6 V.
13	GND	GND	L	Ground = 0 V.
1, 2, 3, 4, 7, 8, 10, 11, 12, 15, 17, 18, 27, 30, 31, 36, 37, 39, 40, 43, 47, 48	NC	N/A	N/A	Must be tied to Ground.
Exposed Paddle	GND	GND	L	Must be tied to Ground.

Not Recommended for New Designs

Downloaded from Arrow.com.

Figure 10. CYWUSB6934/CYWUSB6932, 48-pin QFN – Top View

CYWUSB6934/CYWUSB6932
Top View*

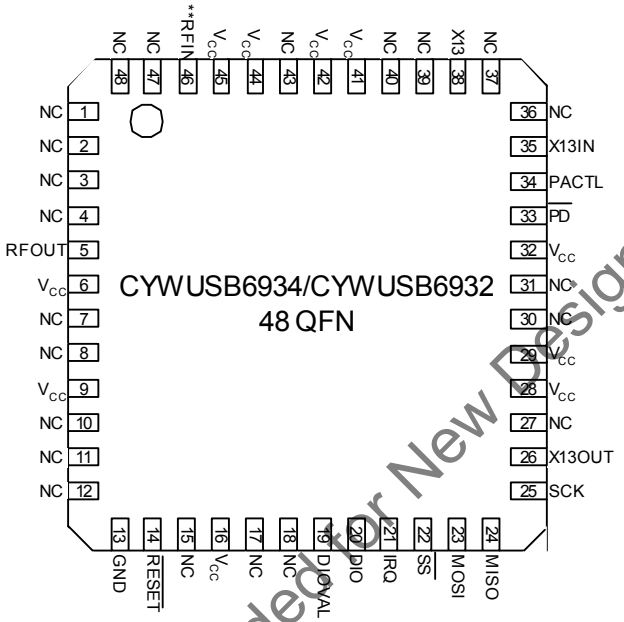

* E-PAD BOTTOM SIDE

** CYWUSB6934 Only

Not Recommended for New Designs

Downloaded from Arrow.com.

Absolute Maximum Ratings

Storage temperature ..... –65 °C to +150 °C

Ambient temperature
with power applied ..... –55 °C to +125 °C

Supply voltage on V_{CC} relative to VSS .....–0.2 V to +3.9 V

DC voltage to logic inputs[9] ..... –0.2 V to V_{CC} +0.2 V

DC voltage applied to
outputs in High-Z state ..... –0.2 V to V_{CC} +0.2 V

Static discharge voltage (Digital)[10] ..... >2000 V

Static discharge voltage (RF)[10] ..... 500 V

Latch up current .....+200 mA, –200 mA

Operating Conditions

V_{CC} (supply voltage) .....2.7 V to 3.6 V

T_A (ambient temperature under bias) ..... 0 °C to +70 °C

Ground voltage ..... 0 V

F_{OSC} (oscillator or crystal frequency) ..... 13 MHz ±50 ppm

DC Characteristics

Over the Operating Range

Table 36. DC Parameters

Parameter	Description	Conditions	Min	Typ[12]	Max	Unit
V_{CC}	Supply voltage		2.7	3.0	3.6	V
V_{OH1}	Output high voltage condition 1	At I_{OH} = –100.0 µA	V_{CC} – 0.1	V_{CC}	–	V
V_{OH2}	Output high voltage condition 2	At I_{OH} = –2.0 mA	2.4	3.0	–	V
V_{OL}	Output low voltage	At I_{OL} = 2.0 mA	–	0.0	0.4	V
V_{IH}	Input high voltage		2.0	–	V_{CC}[11]	V
V_{IL}	Input low voltage		–0.3		0.8	V
I_{IL}	Input leakage current	$0 < V_{IN} < V_{CC}$	–1	0.26	+1	µA
C_{IN}	Pin input capacitance (except X13, X13IN, RFIN)		–	3.5	10	pF
I_{Sleep}	Current consumption during power-down mode	$\overline{PD}$ = LOW	–	0.24	10[15]	µA
IDLE I_{CC}	Current consumption without synthesizer	$\overline{PD}$ = HIGH	–	3	–	mA
STARTUP I_{CC}	ICC from $\overline{PD}$ high to oscillator stable.		–	1.8	–	mA
TX AVG I_{CC1}	Average transmitter current consumption[13]	No handshake	–	5.9	–	mA
TX AVG I_{CC2}	Average transmitter current consumption[14]	With handshake	–	8.1	–	mA
RX $I_{CC\ (PEAK)}$	Current consumption during receive		–	57.7	–	mA
TX $I_{CC\ (PEAK)}$	Current consumption during transmit		–	69.1	–	mA
SYNTH SETTLE I_{CC}	Current consumption with synthesizer on, no transmit or receive		–	28.7	–	mA

Not Recommended for New Designs

Notes

9. It is permissible to connect voltages above Vcc to inputs through a series resistor limiting input current to 1 mA. This can't be done during power down mode. AC timing not guaranteed.
10. Human Body Model (HBM).
11. It is permissible to connect voltages above Vcc to inputs through a series resistor limiting input current to 1 mA.
12. Typ. values measured with V_{CC} = 3.0 V at 25 °C
13. Average Icc when transmitting a 5-byte packet (3 data bytes + 2 bytes of protocol) every 10 ms using the WirelessUSB LS 1-way protocol.
14. Average Icc when transmitting a 5-byte packet (3 data bytes + 2 bytes of protocol) every 10 ms using the WirelessUSB LS 2-way protocol.
15. Max value measured with V_{CC} = 3.2 V.

Downloaded from Arrow.com.

AC Characteristics[16]

Table 37. SPI Interface[17]

Parameter	Description	Min	Typ	Max	Unit
t_{SCK_CYC}	SPI clock period	476	–	–	ns
$t_{SCK_HI\ (BURST\ READ)}$[18]	SPI clock high time	238	–	–	ns
t_{SCK_HI}	SPI clock high time	158	–	–	ns
t_{SCK_LO}	SPI clock low time	158	–	–	ns
t_{DAT_SU}	SPI input data setup time	10	–	–	ns
t_{DAT_HLD}	SPI input data hold time	97[17]	–	–	ns
t_{DAT_VAL}	SPI output data valid time	77[17]	–	174[17]	ns
t_{SS_SU}	SPI slave select setup time before first positive edge of SCK[19]	250	–	–	ns
t_{SS_HLD}	SPI slave select hold time after last negative edge of SCK	80	–	–	ns

Not Recommended for New Designs

Figure 11. SPI Timing Diagram

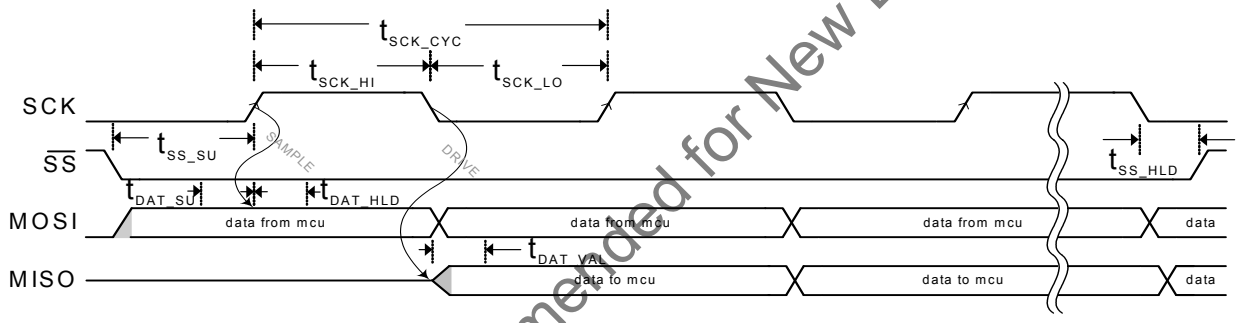

Figure 12. SPI Burst Read Every 9th SCK HI Stretch Timing Diagram

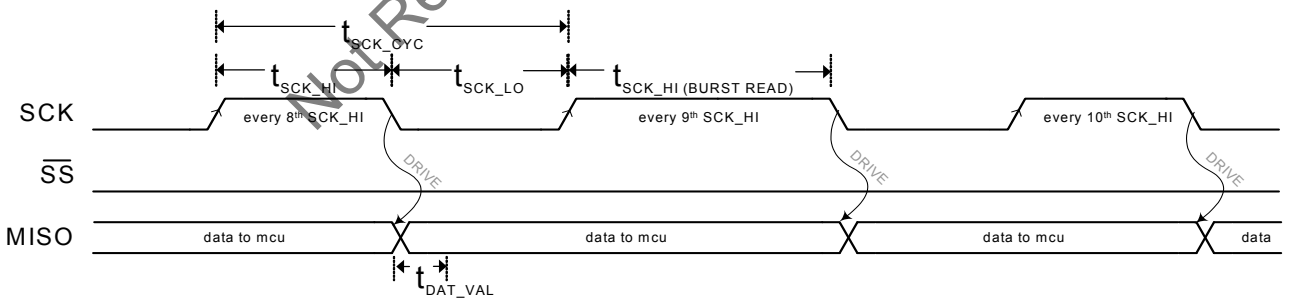

Notes
16. AC values are not guaranteed if voltages on any pin exceed Vcc.
17. For F_{OSC} = 13 MHz ±50 ppm, 3.2 V at 25°C.
18. This stretch only applies to every 9th SCK HI pulse for SPI Burst Reads only.
19. SCK must start low, otherwise the success of SPI transactions are not guaranteed.

Downloaded from Arrow.com.

Table 38. DIO Interface

Parameter	Description	Min	Typ	Max	Unit
Transmit					
$t_{TX_DIOVAL_SU}$	DIOVAL setup time	2.1	–	–	µs
$t_{TX_DIO_SU}$	DIO setup time	2.1	–	–	µs
$t_{TX_DIOVAL_HLD}$	DIOVAL hold time	0	–	–	µs
$t_{TX_DIO_HLD}$	DIO hold time	0	–	–	µs
$t_{TX_IRQ_HI}$	Minimum IRQ high time - 32 chips/bit DDR	–	8	–	µs
	Minimum IRQ high time - 32 chips/bit	–	16	–	µs
	Minimum IRQ high time - 64 chips/bit	–	32	–	µs
$t_{TX_IRQ_LO}$	Minimum IRQ low time - 32 chips/bit DDR	–	8	–	µs
	Minimum IRQ low time - 32 chips/bit	–	16	–	µs
	Minimum IRQ low time - 64 chips/bit	–	32	–	µs
Receive					
$t_{RX_DIOVAL_VLD}$	DIOVAL valid time - 32 chips/bit DDR	–0.01	–	6.1	µs
	DIOVAL valid time - 32 chips/bit	–0.01	–	8.2	µs
	DIOVAL valid time - 64 chips/bit	–0.01	–	16.1	µs
$t_{RX_DIO_VLD}$	DIO valid time - 32 chips/bit DDR	–0.01	–	6.1	µs
	DIO valid time - 32 chips/bit	–0.01	–	8.2	µs
	DIO valid time - 64 chips/bit	–0.01	–	16.1	µs
$t_{RX_IRQ_HI}$	Minimum IRQ high time - 32 chips/bit DDR	–	1	–	µs
	Minimum IRQ high time - 32 chips/bit	–	1	–	µs
	Minimum IRQ high time - 64 chips/bit	–	1	–	µs
$t_{RX_IRQ_LO}$	Minimum IRQ low time - 32 chips/bit DDR	–	8	–	µs
	Minimum IRQ low time - 32 chips/bit	–	16	–	µs
	Minimum IRQ low time - 64 chips/bit	–	32	–	µs

Not Recommended for New Designs

Figure 13. DIO Receive Timing Diagram

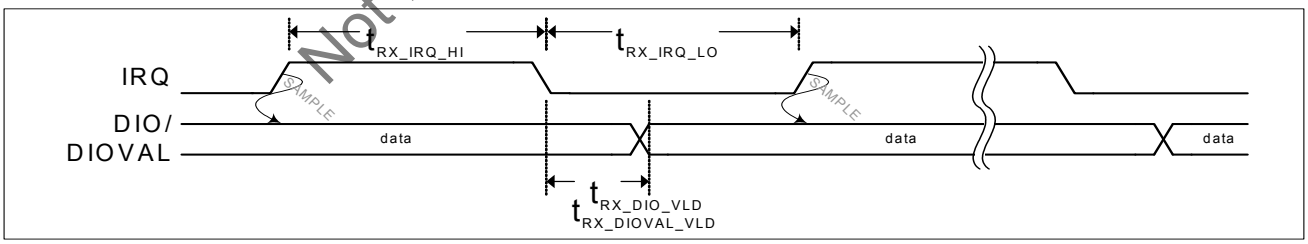

Figure 14. DIO Transmit Timing Diagram

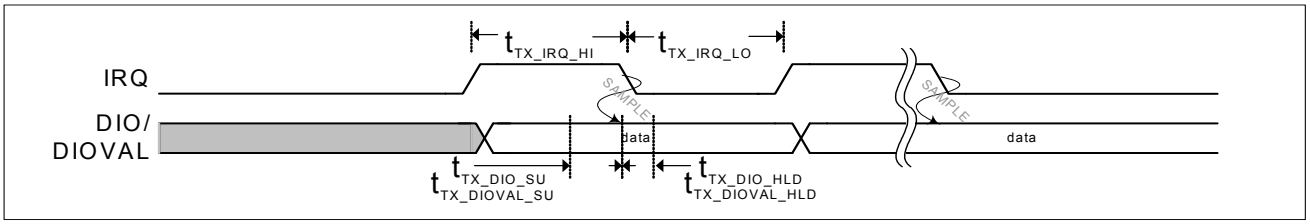

Downloaded from Arrow.com.

Radio Parameters

Table 39. Radio Parameters

Parameter Description	Conditions	Min	Typ	Max	Unit
RF frequency range	Note 20	2.400		2.483	GHz
Radio Receiver (T = 25 °C, V_{CC} = 3.2 V, fosc = 13.000 MHz, X13OUT off, 64 chips/bit, Threshold Low = 8, Threshold High = 56, BER ≤ 10^{-3})					
Sensitivity		–	–90	–	dBm
Maximum received signal		–20	–10	–	dBm
RSSI value for PWR_{in} > –40 dBm		–	28–31	–	
RSSI value for PWR_{in} < –95 dBm		–	0–10	–	
Receive Ready[21]		–	–	35	µs
Interference Performance					
Co-channel interference rejection Carrier-to-Interference (C/I)	C = –60 dBm	–	11	–	dB
Adjacent (1 MHz) channel selectivity C/I 1 MHz	C = –60 dBm	–	3	–	dB
Adjacent (2 MHz) channel selectivity C/I 2 MHz	C = –60 dBm	–	–30	–	dB
Adjacent (≥ 3 MHz) channel selectivity C/I ≥ 3 MHz	C = –67 dBm	–	–40	–	dB
Image[22] Frequency Interference, C/I Image	C = –67 dBm	–	–20	–	dB
Adjacent (1 MHz) interference to in-band image frequency, C/I image ±1 MHz	C = –67 dBm	–	–25	–	dB
Out-of-Band Blocking Interference Signal Frequency					
30 MHz – 2399 MHz, except (FO/N and FO/N±1 MHz)[23]	C = –67 dBm	–	–30	–	dBm
2498 MHz – 12.75 GHz, except (FO*N and FO*N±1 MHz) [23]	C = –67 dBm	–	–20	–	dBm
Intermodulation	C = –64 dBm, Δf = 5,10 MHz	–	–39	–	dBm
Spurious Emission		–	–	–	
30 MHz–1 GHz		–	–	–57	dBm
1 GHz–12.75 GHz except (4.8 GHz - 5.0 GHz)		–	–	–54	dBm
4.8 GHz–5.0 GHz		–	–	–40[24]	dBm
Radio Transmitter (T = 25 °C, V_{CC} = 3.2 V, fosc = 13.000 MHz)					
Maximum RF transmit power	PA = 7	–	0	–	dBm
RF power control range		–	30	–	dB
RF power range control step size	seven steps, monotonic	–	4.3	–	dB
Frequency Deviation	PN Code Pattern 10101010	–	270	–	kHz
Frequency Deviation	PN Code Pattern 11110000	–	320	–	kHz
Zero crossing error		–	± 125	–	ns
Occupied bandwidth	100-kHz resolution bandwidth, –6 dBc	500	–	–	kHz
Initial frequency offset		–	±75	–	kHz
In-band Spurious		–	–	–	
Second channel power (± 2 MHz)		–	–	–30	dBm
≥ Third channel power (≥3 MHz)		–	–	–40	dBm

Notes
20. Subject to regulation.
21. Max. time after receive enable and the synthesizer has settled before receiver is ready.
22. Image frequency is +4 MHz from desired channel (2 MHz low IF, high side injection).
23. FO = Tuned Frequency, N = Integer.
24. Antenna matching network and antenna will attenuate the output signal at these frequencies to meet regulatory requirements.

Not Recommended for New Designs

Downloaded from Arrow.com.

Table 39. Radio Parameters (continued)

Parameter Description	Conditions	Min	Typ	Max	Unit
Non-Harmonically Related Spurs		–	–	–	
30 MHz – 12.75 GHz		–	–	–54	dBm
Harmonic Spurs		–	–	–	
Second harmonic		–	–	–28	dBm
Third harmonic		–	–	–25	dBm
Fourth and greater harmonics		–	–	–42	dBm

Power Management Timing

Table 40. Power Management Timing (The values below are dependent upon oscillator network component selection)[25]

Parameter	Description	Conditions	Min	Typ	Max.	Unit
t_{PDN_X13}	Time from $\overline{PD}$ deassert to X13OUT		–	2000	–	µs
t_{SPI_RDY}	Time from oscillator stable to start of SPI transactions		1	–	–	µs
t_{PWR_RST}	Power On to $\overline{RESET}$ deasserted	V_{CC} at 2.7 V	1300	–	–	µs
t_{RST}	Minimum $\overline{RESET}$ asserted pulse width		1	–	–	µs
t_{PWR_PD}	Power On to $\overline{PD}$ deasserted[26]		1300	–	–	µs
t_{WAKE}	$\overline{PD}$ deassert to clocks running[27]		–	2000	–	µs
t_{PD}	Minimum $\overline{PD}$ asserted pulse width		10	–	–	µs
t_{SLEEP}	$\overline{PD}$ assert to low power mode		–	50	–	ns
t_{WAKE_INT}	$\overline{PD}$ deassert to IRQ[28] assert (wake interrupt)[29]		–	2000	–	µs
t_{STABLE}	$\overline{PD}$ deassert to clock stable	to within ±10 ppm	–	2100	–	µs
$t_{STABLE2}$	IRQ assert (wake interrupt) to clock stable	to within ±10 ppm	–	2100	–	µs

Not Recommended for New Designs

Notes
25. Measured with CTS ATXN6077A crystal.
26. The $\overline{PD}$ pin must be asserted at power up to ensure proper crystal startup.
27. When X13OUT is enabled.
28. Both the polarity and the drive method of the IRQ pin are programmable. See page 11 for more details. Figure 16 illustrates default values for the Configuration register (Reg 0x05, bits 1:0).
29. A wakeup event is triggered when the $\overline{PD}$ pin is deasserted. Figure 16 illustrates a wakeup event configured to trigger an IRQ pin event via the Wake Enable register (Reg 0x1C, bit 0=1).

Downloaded from Arrow.com.

Figure 15. Power On Reset/Reset Timing

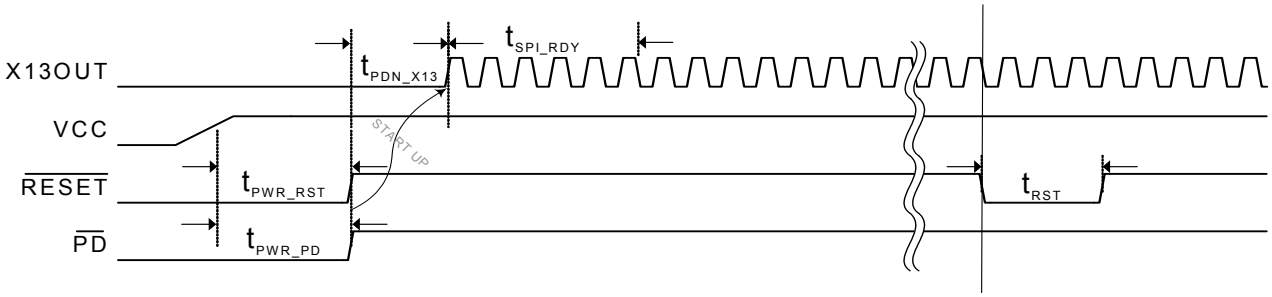

Figure 16. Sleep / Wake Timing

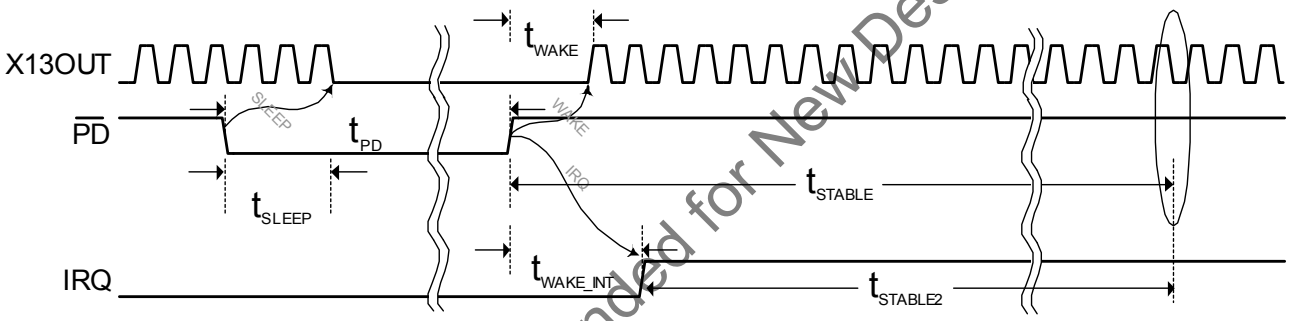

Not Recommended for New Designs

Downloaded from Arrow.com.

Figure 17. AC Test Loads and Waveforms for Digital Pins

AC Test Loads

DC Test Load

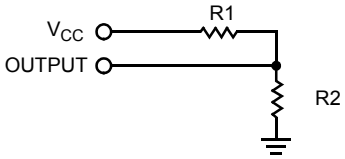

Parameter		Unit
R1	1071	Ω
R2	937	Ω
R_{TH}	500	Ω
V_{TH}	1.4	V
V_{CC}	3.00	V

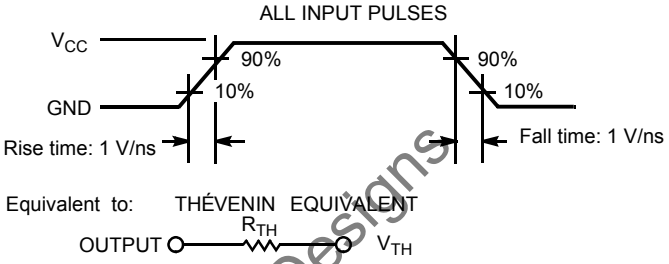

Not Recommended for New Designs

Downloaded from Arrow.com.

Ordering Information

Table 41. Ordering Information

Part Number	Radio	Package Name	Package Type	Operating Range
CYWUSB6934-48LTXC	Transceiver	48-pin QFN (Sawn)	48-pin QFN (Pb-free)	Commercial

Ordering Code Definitions

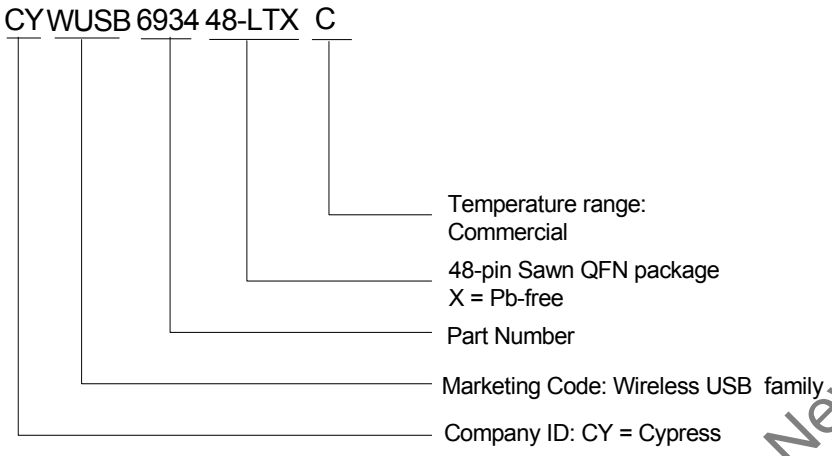

Not Recommended for New Designs

Downloaded from Arrow.com.

Package Diagram

Figure 18. 48-pin QFN 7 × 7 × 1.0 mm LT48C 4.5 × 4.5 E-Pad (Sawn) Package Outline, 001-53698

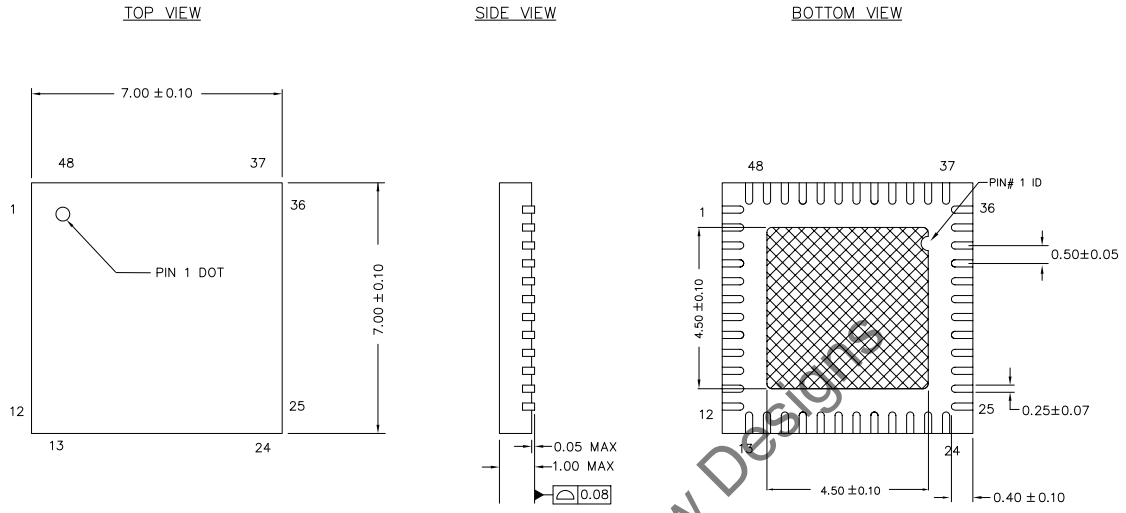

NOTES:

1. HATCH AREA IS SOLDERABLE EXPOSED METAL.
2. REFERENCE JEDEC#: MO–220
3. PACKAGE WEIGHT: 130 ± 13 mg
4. ALL DIMENSIONS ARE IN MILLIMETERS

001-53698 *B

Not Recommended for New Designs

Downloaded from Arrow.com.

Acronyms

Table 42. Acronyms Used in this Document

Acronym	Description
BER	Bit Error Rate
CMOS	Complementary Metal Oxide Semiconductor
CRC	Cyclic Redundancy Check
FEC	Forward Error Correction
FER	Frame Error Rate
GFSK	Gaussian Frequency-Shift Keying
HBM	Human Body Model
ISM	Industrial, Scientific, and Medical
IRQ	Interrupt Request
MCU	Microcontroller Unit
NRZ	Non Return to Zero
PLL	Phase Locked Loop
QFN	Quad Flat No-leads
RSSI	Received Signal Strength Indication
RF	Radio Frequency
Rx	Receive
Tx	Transmit

Document Conventions

Units of Measure

Table 43. Units of Measure

Symbol	Unit of Measure
°C	degree Celsius
dB	decibel
dBc	decibel relative to carrier
dBm	decibel-milliwatt
Hz	hertz
KB	1024 bytes
Kbit	1024 bits
kHz	kilohertz
kΩ	kilohm
MHz	megahertz
MΩ	megaohm
µA	microampere
µs	microsecond
µV	microvolt
µVrms	microvolts root-mean-square
µW	microwatt
mA	milliampere
ms	millisecond
mV	millivolt
nA	nanoampere
ns	nanosecond
nV	nanovolt
Ω	ohm
pp	peak-to-peak
ppm	parts per million
ps	picosecond
sps	samples per second
V	volt

Not Recommended for New Designs

Downloaded from Arrow.com.

Document History Page

Document Title: CYWUSB6932/CYWUSB6934, WirelessUSB™ LS 2.4 GHz DSSS Radio SoC Document Number: 38-16007				
Revision	**ECN**	**Orig. of Change**	**Submission Date**	**Description of Change**
**	123907	LXA	01/20/03	New data sheet.
*A	125470	XGR	04/28/03	Preliminary release
*B	127076	KKU	07/30/03	Updated pinouts, timing diagrams, AC Test loads, DC Characteristics, Radio Characteristics Removed die
*C	128886	KKV	08/04/03	Minor change: removed table of contents and fixed layout of section 10.
*D	129180	TGE	12/04/03	Updated AC and DC characteristics from char. results Updated register entries Changed package type from 56-pin QFN to 48-pin QFN Updated all pinouts and timing diagrams Updated block diagram and functional description Updated application interfaces Added Interrupt descriptions
*E	131851	TGE	12/15/03	Changed Static Discharge Voltage (Digital) Specification of Section
*F	241471	ZTK	See ECN	Removed Static Discharge Voltage (Digital) Specification of Section footnote Updated REG_DATA_RATE (0x04), 111—Not Valid Swapped bit field descriptions of REG_CONFIG Corrected Logic Block Diagram – CYWUSB6932/CYWUSB6934 and Figure 8 Minor edits throughout
*G	284810	ZTK	See ECN	Removed SOIC package option Updated ordering information section Added Table 1 Internal PA Output Power Step Table Added $t_{STABLE2}$ Parameter to Table 40 and Figure 16 Corrected Figure 18 caption Corrected Figure 8 to show QFN matching network Removed Addr 0x01 and 0x02 - unused Updated Figure 10 Updated Spurious Emissions parameters
*H	335758	TGE	See ECN	Corrected Figure 8 - swap RFIN / RFOUT Corrected REG_CONTROL - bit 1 description Added Table 36 footnote 14 - Max. value measured with Vcc = 3.2 V
*I	391306	TGE	See ECN	Added receive ready parameter to Table 39
*J	2770967	DPT	09/29/09	Added 48QFN package diagram (Sawn) Saw Marketing part number in ordering information. Updated package diagram for spec 51-85152
*K	2897889	TGE	03/23/10	Removed inactive parts from Ordering Information. Updated Packaging Information
*L	3048368	HEMP	10/05/2010	Sunset review; no technical updates. Format updates per template.
*M	4135696	DEJO	09/25/2013	Updated Package Diagram: spec 001-53698 – Changed revision from *A to *B. Updated in new template. Completing Sunset Review.

Not Recommended for New Designs

Downloaded from Arrow.com.

Sales, Solutions, and Legal Information

Worldwide Sales and Design Support

Cypress maintains a worldwide network of offices, solution centers, manufacturer's representatives, and distributors. To find the office closest to you, visit us at Cypress Locations.

Products

Automotive	cypress.com/go/automotive
Clocks & Buffers	cypress.com/go/clocks
Interface	cypress.com/go/interface
Lighting & Power Control	cypress.com/go/powerpsoc cypress.com/go/plc
Memory	cypress.com/go/memory
PSoC	cypress.com/go/psoc
Touch Sensing	cypress.com/go/touch
USB Controllers	cypress.com/go/USB
Wireless/RF	cypress.com/go/wireless

PSoC® Solutions

psoc.cypress.com/solutions

PSoC 1 | PSoC 3 | PSoC 4 | PSoC 5LP

Cypress Developer Community

Community | Forums | Blogs | Video | Training

Technical Support

cypress.com/go/support

Not Recommended for New Designs

© Cypress Semiconductor Corporation, 2003-2013. The information contained herein is subject to change without notice. Cypress Semiconductor Corporation assumes no responsibility for the use of any circuitry other than circuitry embodied in a Cypress product. Nor does it convey or imply any license under patent or other rights. Cypress products are not warranted nor intended to be used for medical, life support, life saving, critical control or safety applications, unless pursuant to an express written agreement with Cypress. Furthermore, Cypress does not authorize its products for use as critical components in life-support systems where a malfunction or failure may reasonably be expected to result in significant injury to the user. The inclusion of Cypress products in life-support systems application implies that the manufacturer assumes all risk of such use and in doing so indemnifies Cypress against all charges.

Any Source Code (software and/or firmware) is owned by Cypress Semiconductor Corporation (Cypress) and is protected by and subject to worldwide patent protection (United States and foreign), United States copyright laws and international treaty provisions. Cypress hereby grants to licensee a personal, non-exclusive, non-transferable license to copy, use, modify, create derivative works of, and compile the Cypress Source Code and derivative works for the sole purpose of creating custom software and or firmware in support of licensee product to be used only in conjunction with a Cypress integrated circuit as specified in the applicable agreement. Any reproduction, modification, translation, compilation, or representation of this Source Code except as specified above is prohibited without the express written permission of Cypress.

Disclaimer: CYPRESS MAKES NO WARRANTY OF ANY KIND, EXPRESS OR IMPLIED, WITH REGARD TO THIS MATERIAL, INCLUDING, BUT NOT LIMITED TO, THE IMPLIED WARRANTIES OF MERCHANTABILITY AND FITNESS FOR A PARTICULAR PURPOSE. Cypress reserves the right to make changes without further notice to the materials described herein. Cypress does not assume any liability arising out of the application or use of any product or circuit described herein. Cypress does not authorize its products for use as critical components in life-support systems where a malfunction or failure may reasonably be expected to result in significant injury to the user. The inclusion of Cypress' product in a life-support systems application implies that the manufacturer assumes all risk of such use and in doing so indemnifies Cypress against all charges.

Use may be limited by and subject to the applicable Cypress software license agreement.

All products and company names mentioned in this document may be the trademarks of their respective holders.

Downloaded from Arrow.com.