DO NOT SCALE
DIMENSIONS IN mm

METRIC

THIRD ANGLE PROJECTION

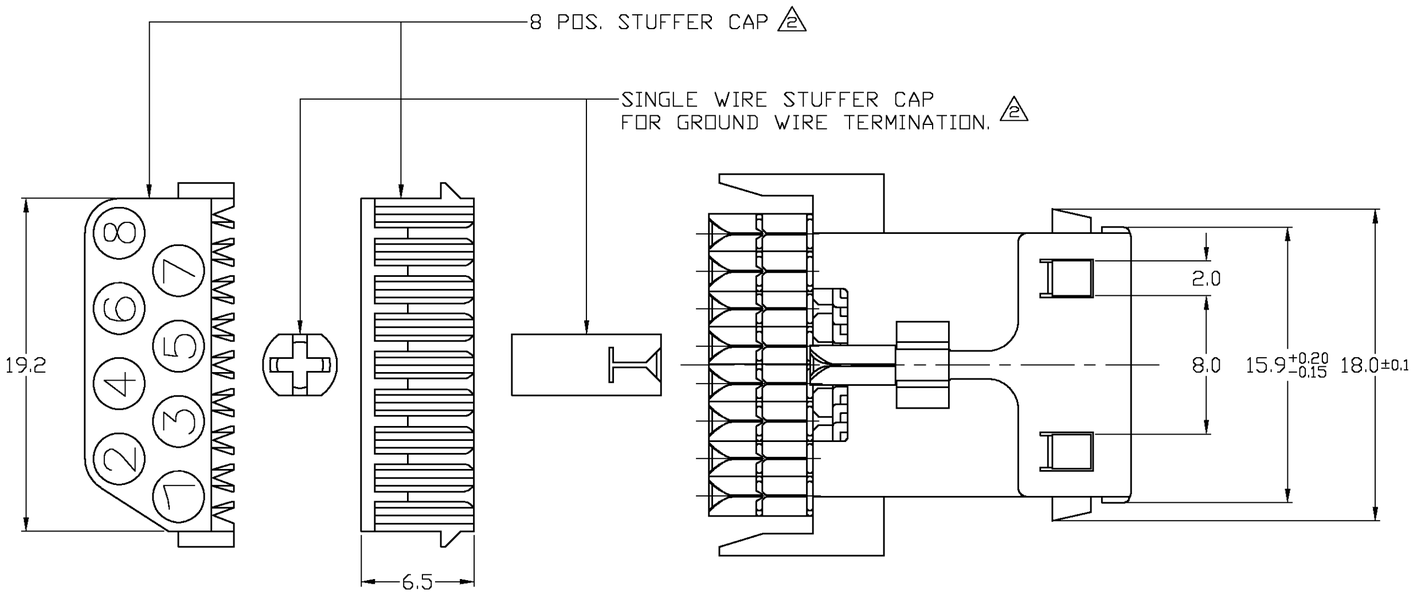

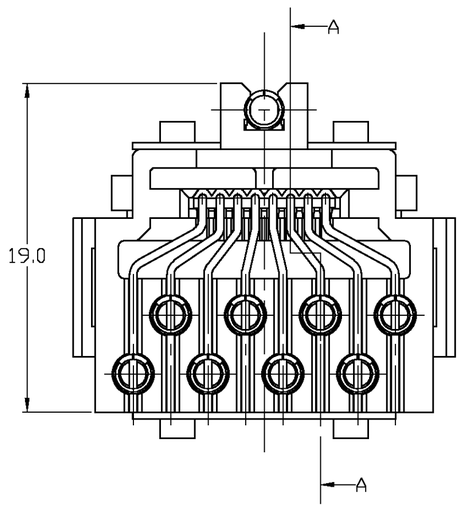

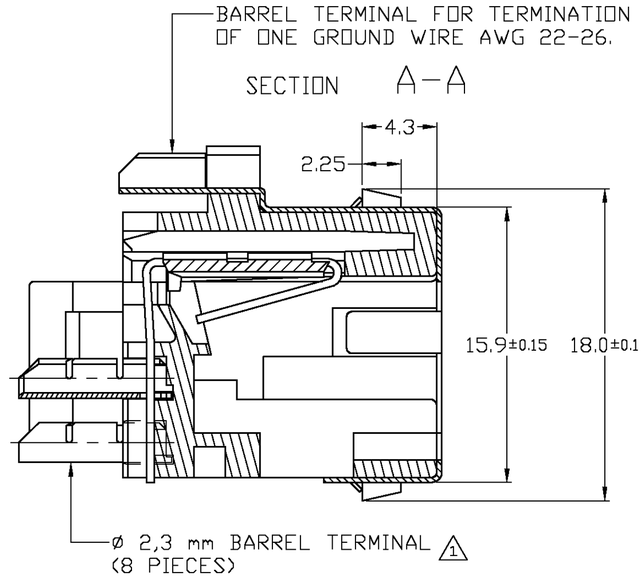

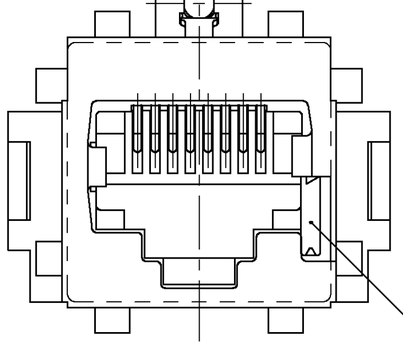

ADDITIONAL MOUNTING CLIP (5)

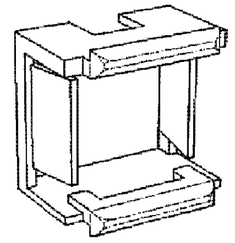

(FOR PANEL CUTOUT, SEE DRAWING C 100575)

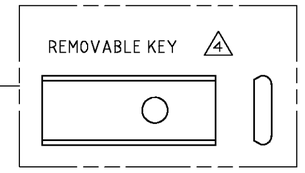

SUGGESTED PANEL LAYOUT

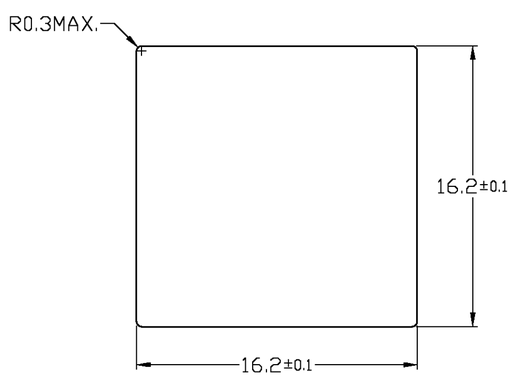

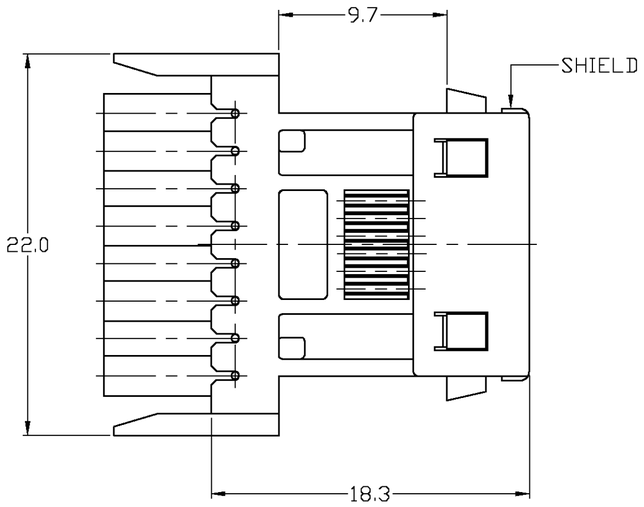

NOTES:

(1) BARREL TERMINALS WIL ACCEPT ON OR TWO WIRES WITH THE SAME SIZE PER TERMINAL.
WIRE RANGE FOR SOLID AND STRANDED WIRES:
0,12 mm² (AWG 26) – 0,35 mm² (AWG 22)
MAXIMUM INSULATION ø: 1,2 mm.

(2) 8 POSITION STUFFER CAP AND SINGLE WIRE STUFFER CAP ARE SHIPPED NOT ASSEMBLED.

(3) MATERIALS:

8 POS. STUFFER CAP:	ABS NATURAL
1 WIRE STUFFER CAP:	NYLON
BARREL TERMINALS:	PHOS. BRONZE PRE-TINPLATED
CONTACTS:	PHOS. BRONZE PLATED 1,25 µm SELECTIVE GOLD OVER 1,25 µm NICKEL
HOUSING KEY:	PBT, COLOR BLACK UL 94HB
SHIELD:	BRASS PRE-TINPLATED

(4) REMOVABLE KEY IS SHIPPED NOT ASSEMBLED.

(5) ADDITIONAL HARDWARE IS REQUIRED FOR PANEL MOUNTING. FOR INSTANCE MOUNTING CLIP 100575-1 (IS NOT INCLUDED).

500 PCS IN A BOX		SEE NOTE (3)		SEE NOTE (3)	216811-1
PACKAGING		FINISH		MATERIAL	P/N
				CUSTOMER DRAWING	FOR REFERENCE ONLY WILL NOT BE UPDATED
				© COPYRIGHT 19 BY AMP HOLLAND B.V. ALL INTERNATIONAL RIGHTS RESERVED. AMP PRODUCTS MAY BE COVERED BY U.S. AND FOREIGN AND/OR PATENTS PENDING.	
G	SR10-0119-01	KV	20 MAR 01	THIS DRAWING IS UNPUBLISHED ~~RELEASED FOR PUBLICATION ,19~~	
F	H-8627	J.T.	J.T. 25 OCT 93	tyco Electronics	Tyco Electronics Corporation Oostkamp – BELGIUM
E	H-8627	J.T.	W.B. 02 AUG 93	NAME TOOLLESS MODULAR JACK 8 POS. SHIELDED	
D	H-8627	J.T.	W.B. 13 APR 92		
C	H-8627	J.v.L.	J.T. 04 NOV 91		
LTR.	REVISION RECORD	DR.	CHK. DATE		
DR.: J.v.LIEMPT DATE: 04 NOV 91	CHK.: W.BRUMMANS DATE:	APP.: J.van SOEST DATE: 27 OCT 93		DWG.No. C-216811	REV.LTR. G / SHEET 1 OF 1 / A2

11 10 9 8 7 6 5 4 3 2 1

Downloaded from Arrow.com.