THIS DRAWING IS UNPUBLISHED. RELEASED FOR PUBLICATION 20
© COPYRIGHT 20 BY - ALL RIGHTS RESERVED.

REVISIONS					
P	LTR	DESCRIPTION	DATE	DWN	APVD
	A2	ECR-16-010931	02AUG2016	L.Z	X.X
	B	ECR-19-009136	30JUL2019	C.D	C.W
	B1	ECR-19-019842	23DEC2019	G.W	C.W
	C	ECR-25-235343	29OCT2025	G.W	C.W

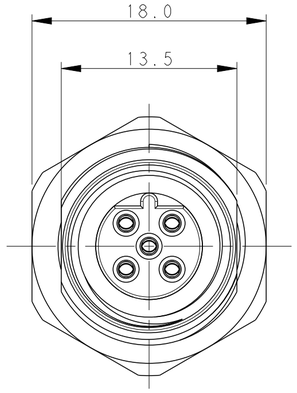

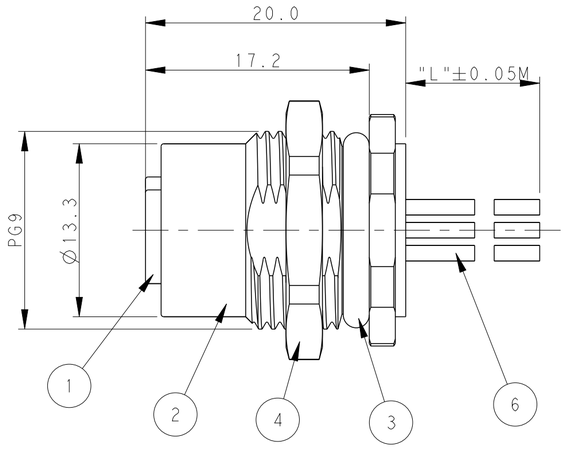

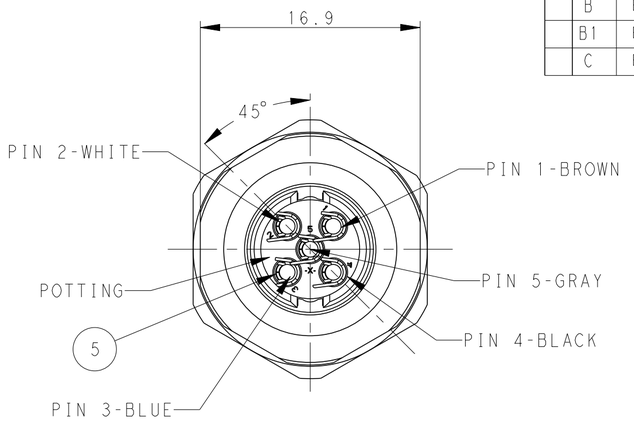

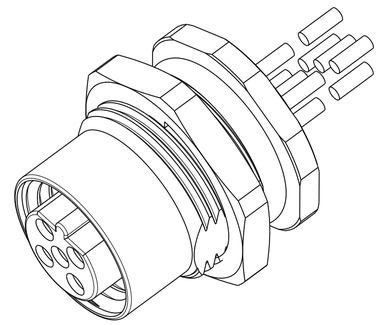

TABLE 1

TECHNICAL DATA	T4171110402-00L	T4171110403-00L	T4171110404-00L	T4171110405-00L
RATED VOLTAGE	250V	250V	250V	60V
RATED CURRENT	4A	4A	4A	4A
POLLUTION DEGREE	3	3	3	3
OVERVOLTAGE CATEGORY	II	II	II	II
CONTACT RESISTANCE	<=10mΩ	<=10mΩ	<=10mΩ	<=10mΩ
INSULATION RESISTANCE	>100MΩ	>100MΩ	>100MΩ	>100MΩ
DEGREE OF PROTECTION	IP67	IP67	IP67	IP67
OPERATION TEMPERATURE	-40~85°C	-40~85°C	-40~85°C	-40~85°C

NOTE:
1. TECHNICAL DATA: SEE TABLE 1
2. PRODUCT COMPLIES WITH IEC61076-2-101
3. RECOMMENDED MOUNT PANEL SEE DETAIL
4. CABLE LENGTH SEE TABLE 2

注释：
1：技术参数，见表1
2：产品符合标准IEC61076-2-101
3：推荐开孔尺寸详见如图所示
4：线长度见表2

CABLE CHARACTERISTIC	CABLE LENGTH "L" 4	DESCRIPTION	POS	TABLE 2 PN
WIRES: 0.34MM^2(22AWG) WIRE PN AND COLOR: 1(BR)/2(WH)/3(BL)/4(BK)/5(GR)	-005:3.0M	RPC-M12B-FF-4CON-PG9-3.0LA 4	4	T4171110404-005
	-004:1.5M	RPC-M12B-FF-4CON-PG9-1.5LA 4	4	T4171110404-004
	-001:0.2M -002:0.5M -003:1.0M	RPC-M12B-FF-5CON-PG9-**LAU 4	5	T4171110405-00L
		RPC-M12B-FF-4CON-PG9-**LAU 4	4	T4171110404-00L
		RPC-M12B-FF-3CON-PG9-**LAU 4	3	T4171110403-00L
		RPC-M12B-FF-2CON-PG9-**LAU 4	2	T4171110402-00L

PIN ARRANGEMENT
B-CODE

T4171110402-00L

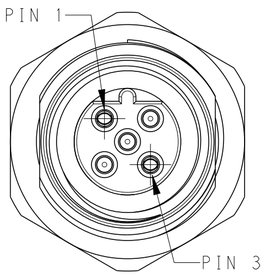

T417111403-00L

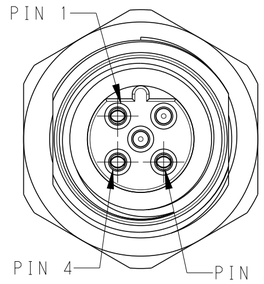

T4171110404-00L

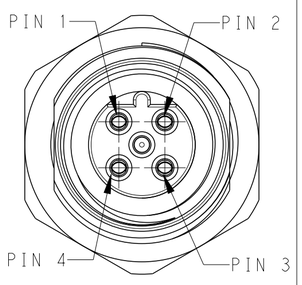

T4171110405-00L

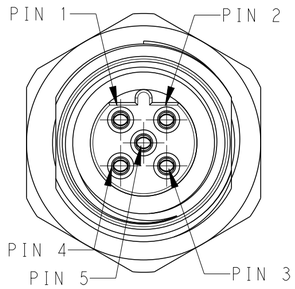

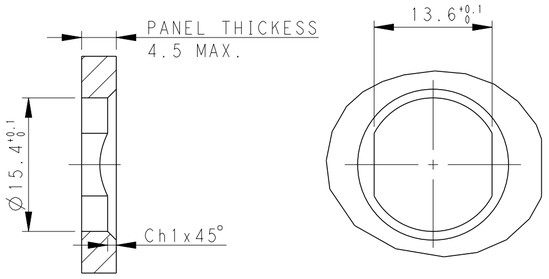

HOUSING CUTOUT FOR PG9 FASTENING THREAD,MOUNTING PANEL WITH FEEDTHROUGH HOULE (ALTERNATIVELY WITH AREA AS ANTI-ROTATION PROTECTION FOR PANEL THICKNESSES>2.5MM UP TO MAX. 4.5MM)

RECOMMENDED PANEL CUTOUT

-	-	WIRE	6	2	3	4	5
FLASH GOLD	BRONZE	CONTACT	5	2	3	4	5
-	BRASS	METAL NUT	4	1	1	1	1
BLACK	RUBBER	O-RING	3	1	1	1	1
-	ZAMAK	M12,MALE,METAL BODY	2	1	1	1	1
BLACK	PA66	M12,MALE HSG, B CODE, 5PINS	1	1	1	1	1
COMMENT	MATERIAL	DESCRIPTION	ITEM	T4171110402-00L	T4171110403-00L	T4171110404-00L	T4171110405-00L

THIS DRAWING IS A CONTROLLED DOCUMENT.

DIMENSIONS: mm

TOLERANCES UNLESS OTHERWISE SPECIFIED:
0 PLC ±-
1 PLC ±0.2
2 PLC ±0.2
3 PLC ±-
4 PLC ±-
ANGLES ±-

MATERIAL -
FINISH -

DWN BO GAO 30MAR2016
CHK KOBBY ZHAO 30MAR2016
APVD XIANG XU 30MAR2016
PRODUCT SPEC 108-106140
APPLICATION SPEC 114-137144
WEIGHT -

TE Connectivity

NAME M12 PANEL MOUNT CONNECTOR
B CODE, FEMALE, REAR MOUNTING

SIZE	CAGE CODE	DRAWING NO	RESTRICTED TO
A2	-	C-T417111040X00L	-

CUSTOMER DRAWING | SCALE 3:1 | SHEET 1 OF 1 | REV C

1471-9 (3/13)

Downloaded from Arrow.com.