Low Voltage PC Board Mount, 0.5 VA to 24 VA *160-161 Series*

Low Voltage, P.C. Board Mount Vertical - 115 & 115/230 V Primary

Features

- 20 output voltages to choose from (5 - 120VAC R.M.S.)
- Six VA size models available from - .5 to 24 VA
- Vertical mount, split bobbin design.
- 1.2, 4.4, 10, 24 VA models are non-concentric wound.
- 0.5 and 1 VA are both concentric wound.
- Low primary to secondary coupling - no electrostatic shield required.
- Choice of economical single primary 115V - 60 Hz only (161 series) or the universal dual primary 115/230V - 50/60 Hz (160 series).
- High insulation - Hipot of 2,000V RMS.
- Class B insulation - 130 degrees C.
- CSA certified (File # LR3902) and UL recognized (File #E207860).

Downloaded from Arrow.com.

Primary Connections - 160 Series Transformers

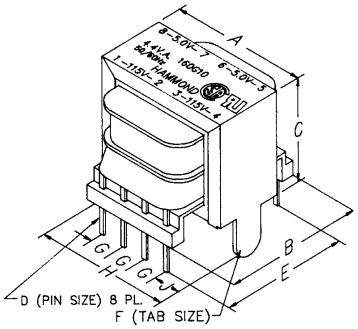

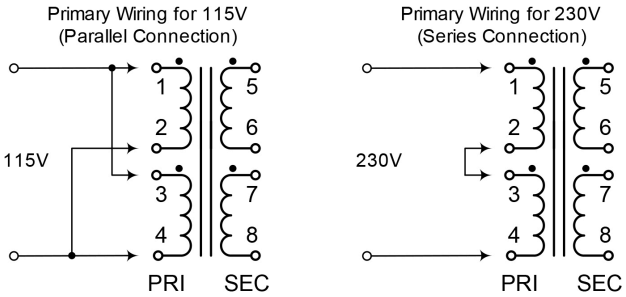

Secondary Connections - 160 Series Transformers

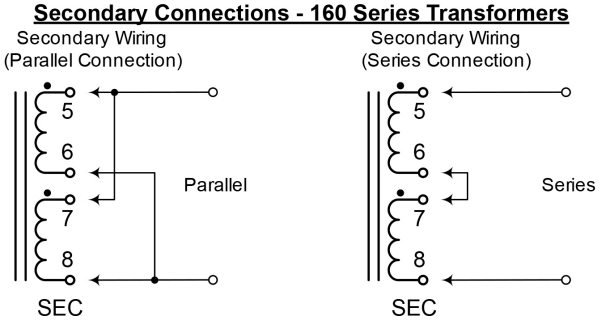

Primary Connections - 161 Series Transformers

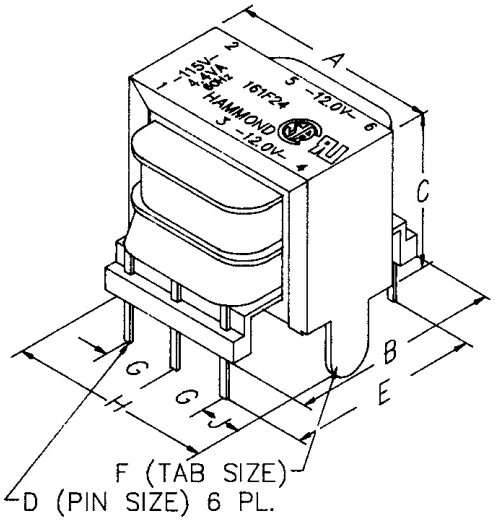

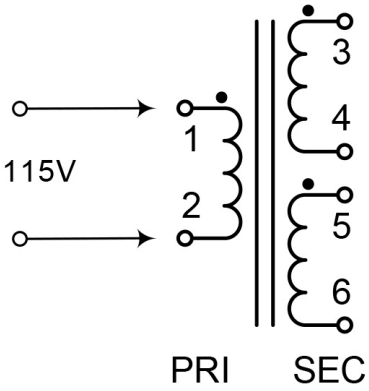

Secondary Connections - 161 Series Transformers

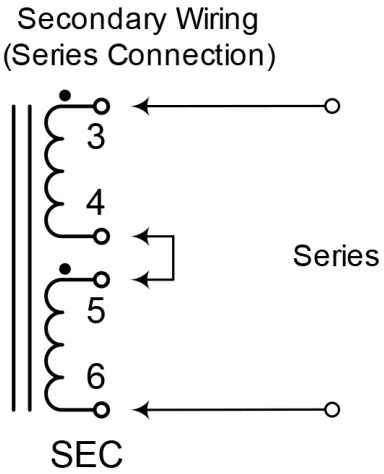

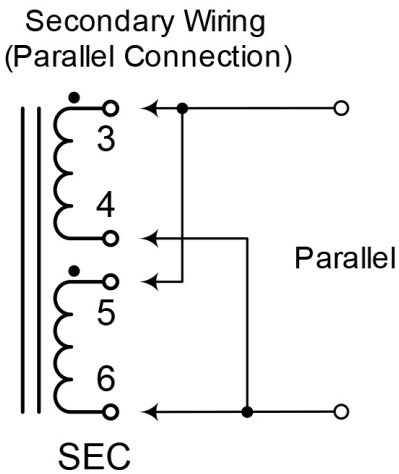

Part No Single Primary 115V	Part No Dual Primary 115/230V	Size VA	Secondary (RMS) Series	 Parallel
161C10	-	0.5	10V C.T. @ 50ma	5V @ 100ma
161D10	**160D10**	1	10V C.T. @ 90ma	5V @ 180ma

Downloaded from Arrow.com.

Part No Single Primary 115V	Part No Dual Primary 115/230V	Size VA	Secondary (RMS) Series	Parallel
161FA10	**160F10**	1.2	10V C.T. @ 120ma	5V @ 240ma
161GA10	**160G10**	4.4	10V C.T. @ 440ma	5V @ 880ma
161J10	**160J10**	10	10V C.T. @ 1A	5V @ 2A
161H10	**160H10**	24	10V C.T. @ 2.4A	5V @ 4.8A
161C12	-	0.5	12.6V C.T. @ 40ma	6.3V @ 80ma
161D12	**160D12**	1	12.6V C.T. @ 70ma	6.3V @ 140ma
161FA12	**160F12**	1.2	12.6V C.T. @ 100ma	6.3V @ 200ma
161GA12	**160G12**	4.4	12.6V C.T. @ 350ma	6.3V @ 700ma
161K12	**160K12**	10	12.6V C.T. @ 800ma	6.3V @ 1.6A
161H12	**160H12**	24	12.6V C.T. @ 2A	6.3V @ 4A
161C16	-	0.5	16V C.T. @ 31.3ma	8V @ 62.5ma
161D16	**160D16**	1	16V C.T. @ 55ma	8V @ 110ma
161EA16	**160E16**	1.2	16V C.T. @ 75ma	8V @ 150ma
161FA16	**160F16**	4.4	16V C.T. @ 260ma	8V @ 520ma
161G16	**160G16**	10	16V C.T. @ 640ma	8V @ 1.28A
161H16	**160H16**	24	16V C.T. @ 1.5A	8V @ 3A
161D20	**160D20**	1	20V C.T. @ 45ma	10V @ 90ma
161EA20	**160E20**	1.2	20V C.T. @ 60ma	10V @ 120ma
161FA20	**160F20**	4.4	20V C.T. @ 220ma	10V @ 440ma
161G20	**160G20**	10	20V C.T. @ 500ma	10V @ 1A
161H20	**160H20**	24	20V C.T. @ 1.2A	10V @ 2.4A
161D24	**160D24**	1	24V C.T. @ 35ma	12V @ 70ma
161E24	**160E24**	1.2	24V C.T. @ 50ma	12V @ 100ma
161F24	**160F24**	4.4	24V C.T. @ 180ma	12V @ 360ma
161G24	**160G24**	10	24V C.T. @ 450ma	12V @ 900ma
161H24	**160H24**	24	24V C.T. @ 1A	12V @ 2A
161D28	**160D28**	1	28V C.T. @ 30ma	14V @ 60ma
161E28	**160E28**	1.2	28V C.T. @ 40ma	14V @ 80ma
161F28	**160F28**	4.4	28V C.T. @ 160ma	14V @ 320ma
161G28	**160G28**	10	28V C.T. @ 360ma	14V @ 720ma
161H28	**160H28**	24	28V C.T. @ 800ma	14V @ 1.6A
161D34	**160D34**	1	34V C.T. @ 25ma	17V @ 50ma
161E34	**160E34**	1.2	34V C.T. @ 35ma	17V @ 70ma
161F34	**160F34**	4.4	34V C.T. @ 125ma	17V @ 250ma
161G34	**160G34**	10	34V C.T. @ 300ma	17V @ 600ma
161H34	**160H34**	24	34V C.T. @ 700ma	17V @ 1.4A
161D40	**160D40**	1	40V C.T. @ 20ma	20V @ 40ma
161E40	**160E40**	1.2	40V C.T. @ 30ma	20V @ 60ma
161F40	**160F40**	4.4	40V C.T. @ 110ma	20V @ 220ma
161G40	**160G40**	10	40V C.T. @ 250ma	20V @ 500ma
161H40	**160H40**	24	40V C.T. @ 600ma	20V @ 1.2A
161D56	**160D56**	1	56V C.T. @ 15ma	28V @ 30ma
161E56	**160E56**	1.2	56V C.T. @ 20ma	28V @ 40ma
161F56	**160F56**	4.4	56V C.T. @ 80ma	28V @ 160ma
161G56	**160G56**	10	56V C.T. @ 180ma	28V @ 360ma
161H56	**160H56**	24	56V C.T. @ 420ma	28V @ 840ma
161D120	**160D120**	1	120V C.T. @ 8ma	60V @ 16ma
161E120	**160E120**	1.2	120V C.T. @ 10ma	60V @ 20ma
161F120	**160F120**	4.4	120V C.T. @ 35ma	60V @ 70ma
161G120	**160G120**	10	120V C.T. @ 85ma	60V @ 170ma
161H120	**160H120**	24	120V C.T. @ 200ma	60V @ 400ma

Mechanical & Schematic Data (160 Series):

Size	Overall Dimensions										
(VA)	A	B	C	D Thicknes s	D Width	E	F Thicknes s	F Width	G	H	J
1	1.00	1.38	0.83	0.02	0.04	1.20	-	-	0.20	N/A	N/A
1.2	1.38	1.19	1.22	0.02	0.04	1.00	-	-	0.20	N/A	N/A
4.4	1.69	1.25	1.45	0.02	0.04	1.10	0.03	0.12	0.25	1.67	0.46
10	1.94	1.44	1.69	0.02	0.04	1.30	0.03	0.19	0.25	1.89	0.57
24	1.63	2.25	1.38	0.02	0.04	2.10	-	-	0.25	N/A	N/A

Downloaded from Arrow.com.

Mechanical & Schematic Data (161 Series):

Size	Overall Dimensions										
				D Thicknes			F Thicknes				
(VA)	A	B	C	s	D Width	E	s	F Width	G	H	J
0.5	1.00	0.94	0.84	0.025	0.03	0.78	-	-	0.25	-	-
1	1.00	1.38	0.83	0.02	0.04	1.20	-	-	0.25	-	-
1.2	1.38	1.19	1.22	0.02	0.04	1.00	-	-	0.31	-	-
4.4	1.69	1.25	1.45	0.02	0.04	1.10	0.03	0.12	0.40	1.67	0.44
10	1.94	1.44	1.69	0.02	0.04	1.30	0.03	0.19	0.40	1.89	0.55
24	1.63	2.25	1.38	0.02	0.04	2.10	-	-	0.40	-	-

Tags: **power transformer**, **PCB mount**, **vertical mount**, **split bobbin**, **output**, **single primary**, **dual primary**

Data subject to change without notice.

© 2026. Hammond Manufacturing Ltd. All rights reserved.

Downloaded from Arrow.com.