MYBSP0122BABFT / MYBSP0055AABFT

Isolated DC-DC converter for PoE PD

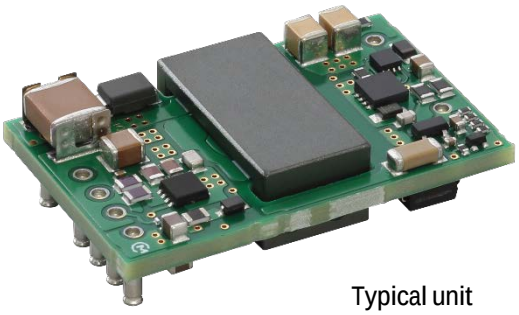

Typical unit

FEATURES

- Support IEEE802.3at class4
- 25.5W DC-DC converter
- Support Type2 PSE Indicator
- Support Adapter ORing
- 37-57V Input Voltage range
- 22.4 x 35.5 x 10.55mm Size
- 92.5% efficiency (typical, 12Vout)
- Surface mount module
- 2250Vdc Input-Output Isolation
- Operating Temperature range -40 to +85 °C

PRODUCT OVERVIEW

The MYBSP0122BABFT / MYBSP0055AABFT is an isolated, regulated, DC-DC converter for PoE PD that has an input range of 37-57Vdc with a typical efficiency of 92.5%(12Vout), and full 2250 Volt DC isolation.

The MYBSP0122BABFT / MYBSP0055AABFT is ideal for IEEE 802.3at Compliant Devices. Module has self-protection features. These include input undervoltage lockout and output current limit. The outputs current limit is using the hiccup autorestart technique.

And the module has detection and classification for compliant IEEE802.3at. MYBSP0122BABFT / MYBSP0055AABFT has three additional pins for Type2 PSE Indicator and Adapter ORing compared to MYBSP0122BABF/ MYBSP0055AABF.

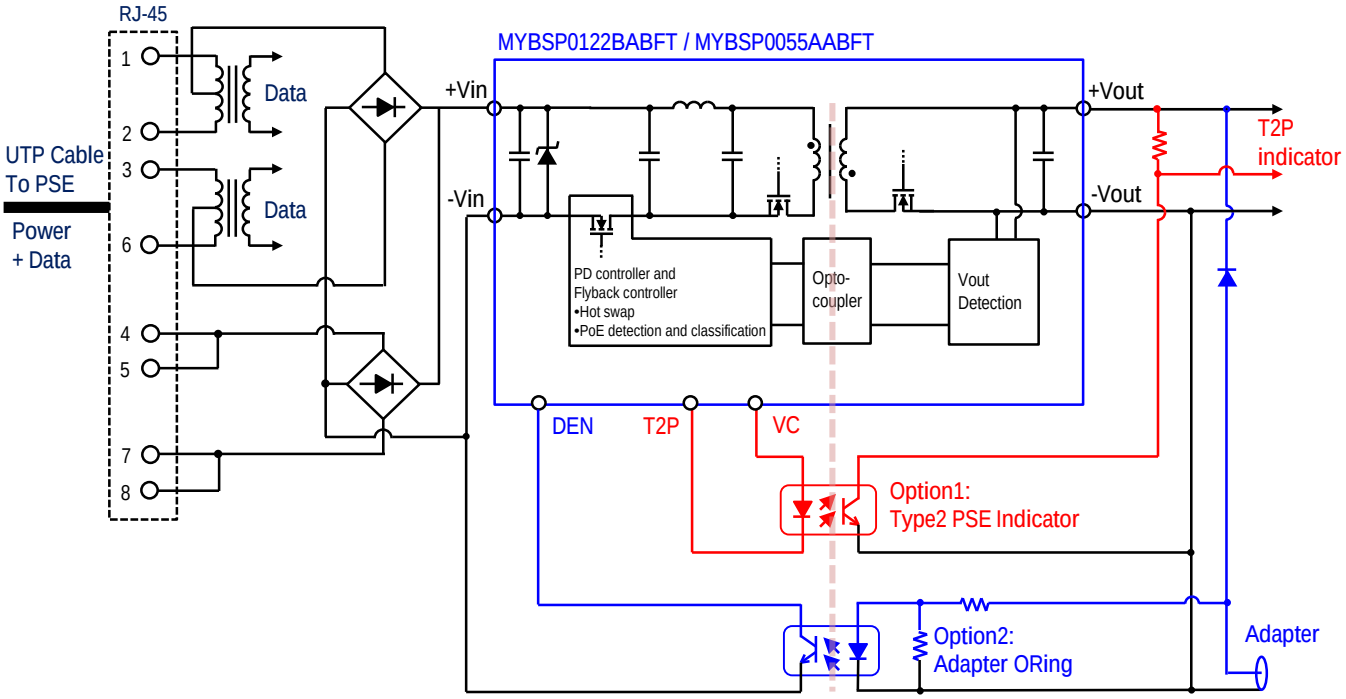

Figure 1. Simplified Block Diagram
Typical topology is shown.

Downloaded from Arrow.com.

PERFORMANCE SPECIFICATIONS SUMMARY AND ORDERING GUIDE

Model Number	Output						Input				Efficiency (%)		Package (mm)
	Vout (Vdc)	Iout (A,Max.)	Power (W)	R/N Max. (mVp-p)	Regulation Typ.		Vin Nom. (Vdc)	Range (Vdc)	Iin, no load Typ.(mA)	Iin, full load Typ.(A)			
					Line (%)	Load (%)					Min.	Typ.	
MYBSP0122BABFT	12	2.125	25.5	150	±0.1	±0.1	48	37-57	3	0.57	90	92.5	22.4 x 35.5 x 10.55
MYBSP0055AABFT	5	5.1	25.5	150	±0.1	±0.1	48	37-57	5	0.59	88	90.5	

1. Please refer to the Part Number Structure for additional ordering information and options.
2. All specifications are at nominal line voltage, full load, +25°C unless otherwise stated.

PART NUMBER STRUCTURE

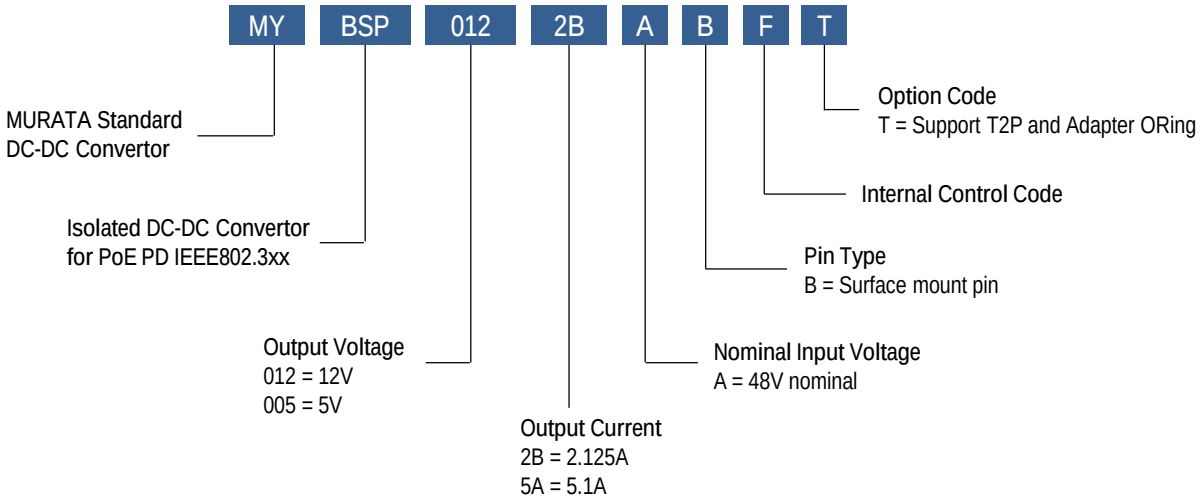

Product Marking

Layout

Top View

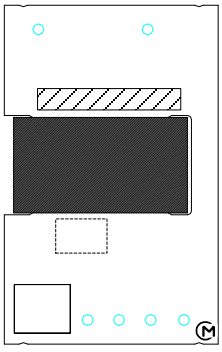

1Pin

Codes

MFG ID
Model Number
Internal Manufacturing Code

Downloaded from Arrow.com.

FUNCTIONAL SPECIFICATIONS, MYBSP0122BABFT

ABSOLUTE MAXIMUM RATINGS	Conditions	Minimum	Typical / Nominal	Maximum	Units
Input Voltage, Continuous		0		57	Vdc
Input Voltage, Transient	100ms max. duration			60	Vdc
Isolation Voltage	Input to output, Leak current 1mA max for 1minute at +25°C/60%RH.			2250	Vdc
Output Power		0		25.5	W
Output Current	Current-limited, no damage, short-circuit protected	0		2.125	A
Storage Temperature Range	Vin = Zero (no power)	-40		90	°C
Absolute maximums are stress ratings. Exposure of devices to greater than any of these conditions may adversely affect long-term reliability. Proper operation under conditions other than those listed in the Performance/Functional Specifications Table is not implied or recommended.					
INPUT					
Operating Voltage Range		37	48	57	Vdc
Start-up threshold	Rising input voltage	36.1		40.2	Vdc
Undervoltage shutdown	Falling input voltage	30.3		33.8	Vdc
Internal Filter Type			Pi		
Input current					
Full Load Conditions	Vin = nom., Iout = max		0.57		A
Low Line Input current	Vin = min., Iout = max.		0.64		A
No Load Current	Vin = nom., Iout = 0A.		3		mA
On Resistance of Internal Hotswap			0.45		Ω
Resistance for detection	Vin=2.7 to 10.1V		24.9		kΩ
Classification current	Vin=14.5 to 20.5V		40		mA
GENERAL and SAFETY					
Efficiency	Vin = 48V, full load	90	92.5		
Isolation					
Isolation Voltage	Input to output, Leak current 1mA max for 1minute at +25°C/60%RH.	2250			Vdc
Insulation Safety Rating			Functional		
Isolation Capacitance			1500		pF
Calculated MTBF	Telcordia SR-332, issue 1, class 3, ground fixed, Ta = +25°C		2476		Hours x 10^3
DYNAMIC CHARACTERISTIC					
Fixed Switching Frequency *1	Iout = max		220		kHz
Vout Rise Time	From 10%-90% of Vout		10		ms
Dynamic Load Response	50-100-50% load step to 1% of Vout		150		µSec
Dynamic Load Peak Deviation	same as above		±200		mVdc

Downloaded from Arrow.com.

FUNCTIONAL SPECIFICATIONS, MYBSP0122BABFT(CONT.)

OUTPUT	Conditions	Minimum	Typical / Nominal	Maximum	Units
Total Output Power		0		25.5	W
Voltage					
Nominal Output Voltage	all conditions	11.64	12	12.36	Vdc
Overvoltage Protection			None		Vdc
Current					
Output Current Range *2		0		2.125	A
Current Limit Inception		2.2			A
Short circuit protection method	Hiccup current limiting		Non-latching		
Regulation					
Line Regulation	Vin=min. to max., Vout=nom., full load		±0.1		% of Vout
Load Regulation	Iout = min. to max.		±0.1		% of Vout
Ripple and Noise	150 MHz BW, Cout=1µF MLCC paralleled with 10µF			150	mV pk-pk
Temperature Coefficient	At all outputs		±0.02		% of Vout/°C
Maximum Capacitive Loading	Low ESR	0		400	µF
T2P / VC / DEN					
T2P					
Sinking Current	After 2 event classification, T2P connect to VC		1.2		mA
VC					
Output Voltage	After start up		8.5	12	V
DEN					
Output Voltage	DEN=open			+Vin	V
Output Current	DEN connect to -Vin			5	mA
Disable Voltage	Falling			2.8	V
MECHANICAL					
Outline Dimensions	L x W x H		22.4 x 35.5 x 10.55		mm
Weight			13.1		Grams
Pin Diameter			1.57		mm
Pin Material			Copper alloy		
ENVIRONMENTAL					
Operating Ambient Temperature Range		-40		85	°C
Storage Temperature	Vin = Zero (no power)	-40		90	°C
Thermal Protection/Shutdown	Measured at hotspot		None		°C
Electromagnetic Interference Conducted, EN55022/CISPR22	External filter is required		B		Class
RoHS rating			RoHS-6		

Specification Notes

Unless otherwise noted, all specifications are typical at nominal input voltage, nominal output voltage and full load. General conditions are +25°C ambient temperature, near sea level altitude, natural convection airflow. All models are tested and specified with external parallel 0.1µF and 10µF output capacitors (See Technical Notes).

*1 Variable frequency operation at light load.
*2 Input current must be greater than or equal to 10mA if your application applies Maintain Power Signature(MPS) by IEEE802.3at. Please check with your application.

Downloaded from Arrow.com.

PERFORMANCE DATA, MYBSP0122BABFT

Efficiency vs. Line Voltage and Load Current
(Ta=+25°C)

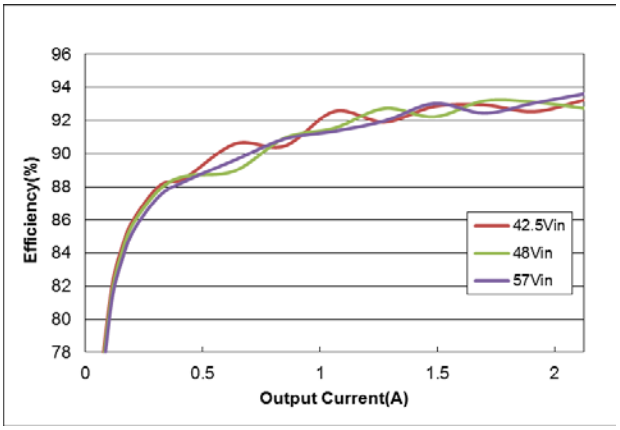

Load Regulation (Ta=+25°C)

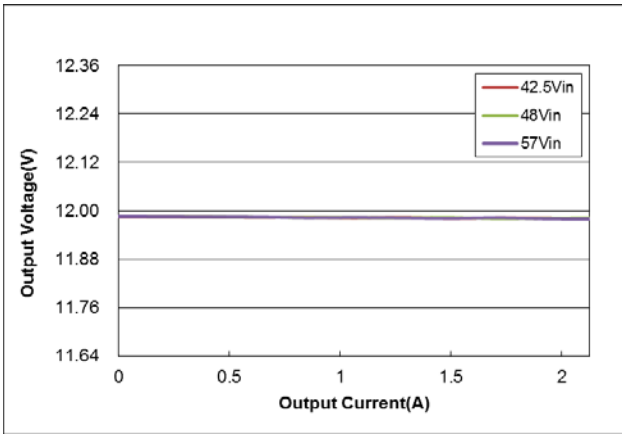

Vout Start-up
(Vin=48V, Iout=2.125A, Ta=+25°C)

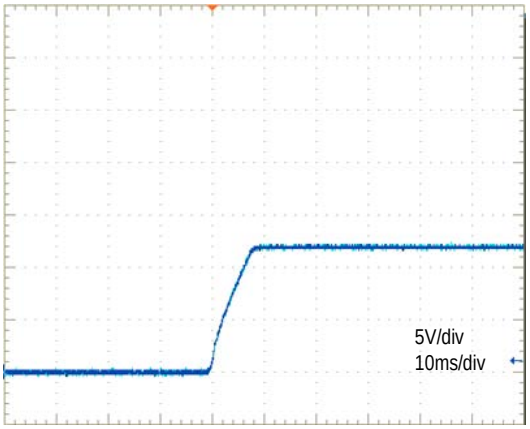

Output Ripple and Noise
(Vin=48V, Iout=2.125A, Ta=+25°C)

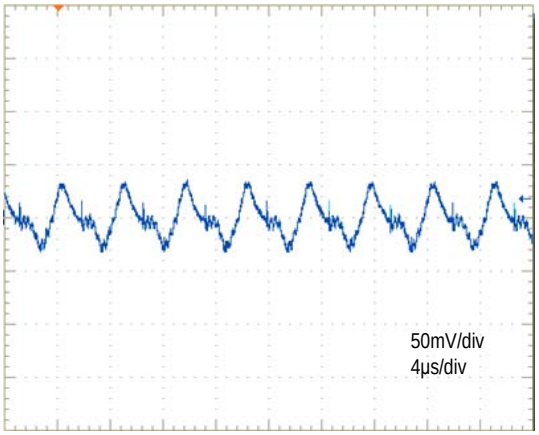

Transient Response (Vin=48V, Iout=1.06A to 2.125A, Ta=+25°C)
Ch2=Vout, 200mV/div, Ch4=Iout, 1A/div

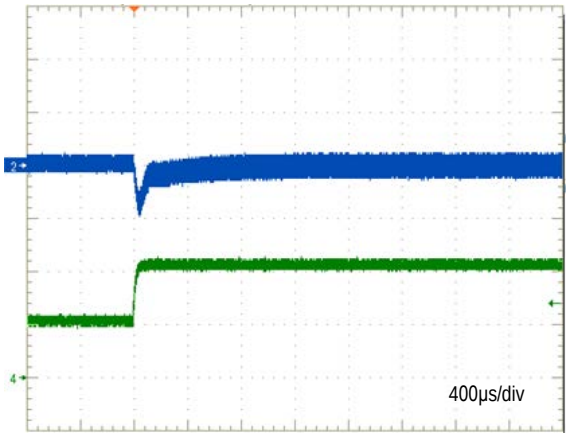

Transient Response (Vin=48V, Iout=2.125A to 1.06A, Ta=+25°C)
Ch2=Vout, 200mV/div, Ch4=Iout, 1A/div

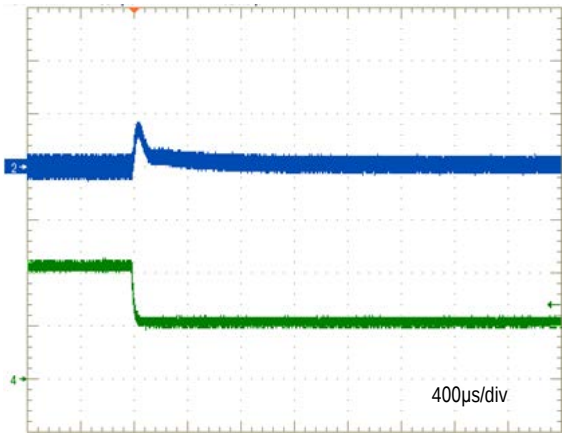

Downloaded from Arrow.com.

PERFORMANCE DATA, MYBSP0122BABFT(CONT.)

Conduction Noise (Vin=48V, Iout=2.125A, Ta=+25°C)
with External Input Filter

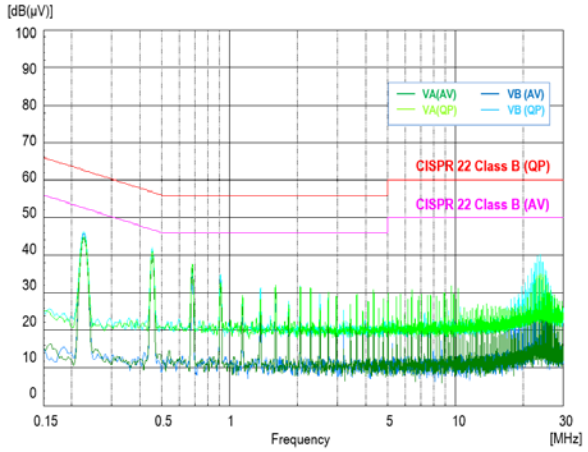

Thermal Derating
Unit under test (UUT) is covered by acrylic box to avoid airflow.
(Vin=42.5-57V, See Technical Notes)

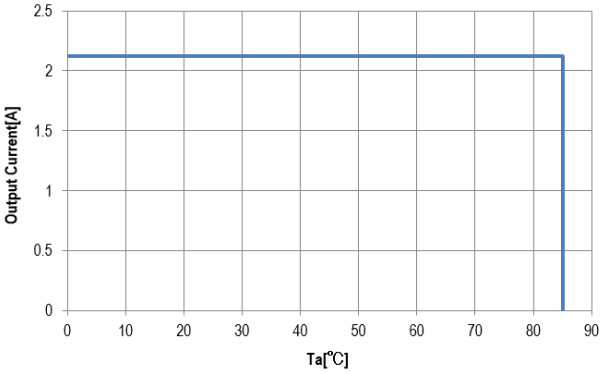

Downloaded from Arrow.com.

FUNCTIONAL SPECIFICATIONS, MYBSP0055AABFT

ABSOLUTE MAXIMUM RATINGS	Conditions	Minimum	Typical / Nominal	Maximum	Units
Input Voltage, Continuous		0		57	Vdc
Input Voltage, Transient	100ms max. duration			60	Vdc
Isolation Voltage	Input to output, Leak current 1mA max for 1minute at +25°C/60%RH.			2250	Vdc
Output Power		0		25.5	W
Output Current	Current-limited, no damage, short-circuit protected	0		5.1	A
Storage Temperature Range	Vin = Zero (no power)	-40		90	°C
Absolute maximums are stress ratings. Exposure of devices to greater than any of these conditions may adversely affect long-term reliability. Proper operation under conditions other than those listed in the Performance/Functional Specifications Table is not implied or recommended.					
INPUT					
Operating Voltage Range		37	48	57	Vdc
Start-up threshold	Rising input voltage	36.1		40.2	Vdc
Undervoltage shutdown	Falling input voltage	30.3		33.8	Vdc
Internal Filter Type			Pi		
Input current					
Full Load Conditions	Vin = nom., Iout = max		0.59		A
Low Line Input current	Vin = min., Iout = max.		0.67		A
No Load Current	Vin = nom., Iout = 0A.		5		mA
On Resistance of Internal Hotswap			0.45		Ω
Resistance for detection	Vin=2.7 to 10.1V		24.9		kΩ
Classification current	Vin=14.5 to 20.5V		40		mA
GENERAL and SAFETY					
Efficiency	Vin = 48V, full load	88	90.5		
Isolation					
Isolation Voltage	Input to output, Leak current 1mA max for 1minute at +25°C/60%RH.	2250			Vdc
Insulation Safety Rating			Functional		
Isolation Capacitance			1500		pF
Calculated MTBF	Telcordia SR-332, issue 1, class 3, ground fixed, Ta = +25°C,		2476		Hours x 10^3
DYNAMIC CHARACTERISTIC					
Fixed Switching Frequency *1	Iout = max		220		kHz
Vout Rise Time	From 10%-90% of Vout		5		ms
Dynamic Load Response	50-100-50% load step to 1% of Vout		150		µSec
Dynamic Load Peak Deviation	same as above		±100		mVdc

Downloaded from Arrow.com.

FUNCTIONAL SPECIFICATIONS, MYBSP0055AABFT(CONT.)

OUTPUT	Conditions	Minimum	Typical / Nominal	Maximum	Units
Total Output Power		0		25.5	W
Voltage					
Nominal Output Voltage	all conditions	4.85	5	5.15	Vdc
Overvoltage Protection			None		Vdc
Current					
Output Current Range *2		0		5.1	A
Current Limit Inception		5.3			A
Short circuit protection method	Hiccup current limiting		Non-latching		
Regulation					
Line Regulation	Vin=min. to max., Vout=nom., full load		±0.1		% of Vout
Load Regulation	Iout = min. to max.		±0.1		% of Vout
Ripple and Noise	150 MHz BW, Cout=1µF MLCC paralleled with 10µF			150	mV pk-pk
Temperature Coefficient	At all outputs		±0.02		% of Vout/°C
Maximum Capacitive Loading	Low ESR	0		400	µF
T2P / VC / DEN					
T2P					
Sinking Current	After 2 event classification, T2P connect to VC		1.2		mA
VC					
Output Voltage	After start up		8.5	12	V
DEN					
Output Voltage	DEN=open			+Vin	V
Output Current	DEN connect to -Vin			5	mA
Disable Voltage	Falling			2.8	V
MECHANICAL					
Outline Dimensions	L x W x H		22.4 x 35.5 x 10.55		mm
Weight			13.1		Grams
Pin Diameter			1.57		mm
Pin Material			Copper alloy		
ENVIRONMENTAL					
Operating Ambient Temperature Range		-40		85	°C
Storage Temperature	Vin = Zero (no power)	-40		90	°C
Thermal Protection/Shutdown	Measured at hotspot		None		°C
Electromagnetic Interference Conducted, EN55022/CISPR22	External filter is required		B		Class
RoHS rating			RoHS-6		

Specification Notes

Unless otherwise noted, all specifications are typical at nominal input voltage, nominal output voltage and full load. General conditions are +25°C ambient temperature, near sea level altitude, natural convection airflow. All models are tested and specified with external parallel 0.1µF and 10µF output capacitors (See Technical Notes).

*1 Pulse skip operation at light load.
*2 Input current must be greater than or equal to 10mA if your application applies Maintain Power Signature(MPS) by IEEE802.3at. Please check with your application.

Downloaded from Arrow.com.

PERFORMANCE DATA, MYBSP0055AABFT

Efficiency vs. Line Voltage and Load Current
(Ta=+25°C)

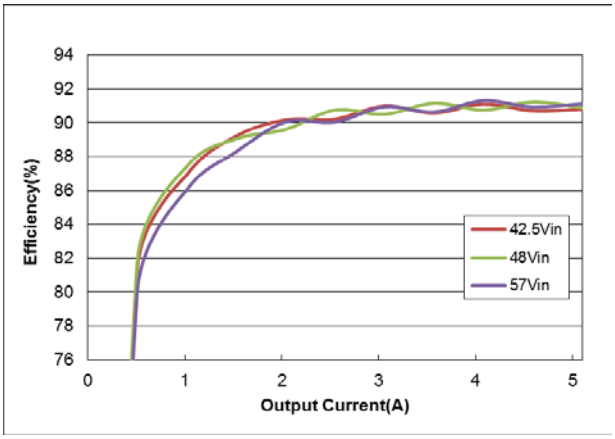

Load Regulation (Ta=+25°C)

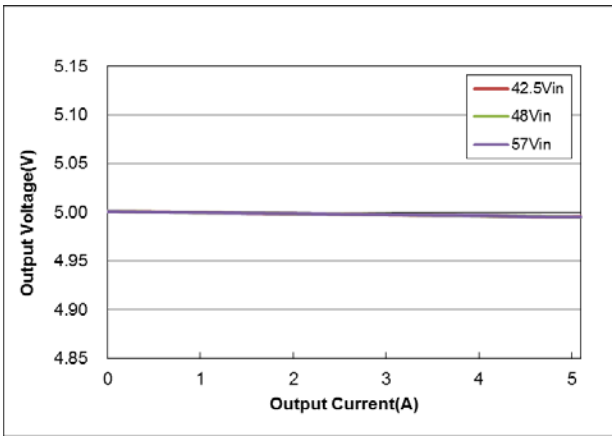

Vout Start-up
(Vin=48V, Iout=5.1A, Ta=+25°C)

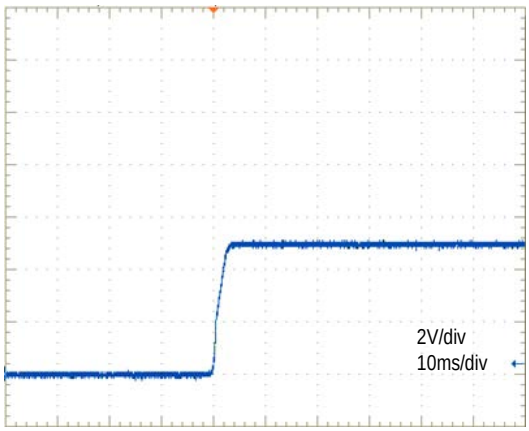

Output Ripple and Noise
(Vin=48V, Iout=5.1A, Ta=+25°C)

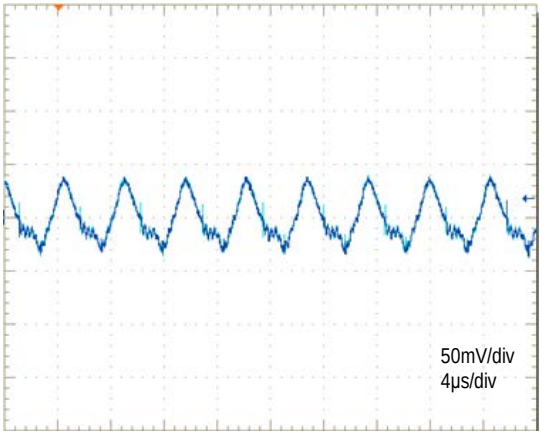

Transient Response (Vin=48V, Iout=2.55A to 5.1A, Ta=+25°C)
Ch3=Vout, 200mV/div, Ch4=Iout, 2A/div

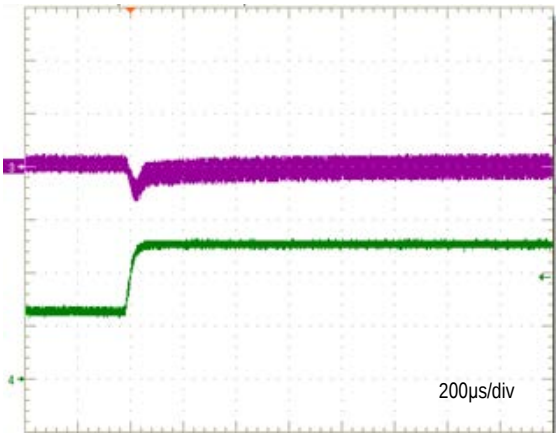

Transient Response (Vin=48V, Iout=2.55A to 5.1A, Ta=+25°C)
Ch3=Vout, 200mV/div, Ch4=Iout, 2A/div

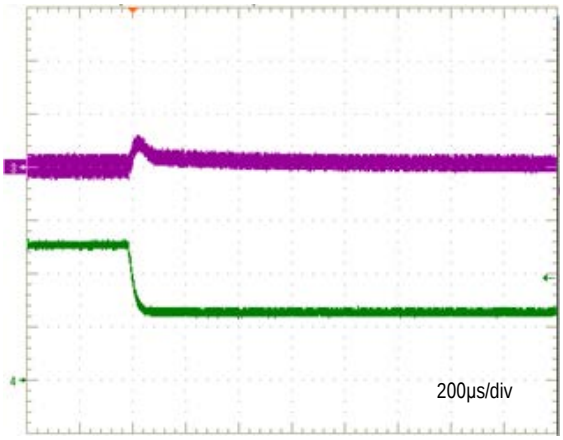

Downloaded from Arrow.com.

PERFORMANCE DATA, MYBSP0055AABFT(CONT.)

Conduction Noise (Vin=48V, Iout=5.1A, Ta=+25°C)
with External Input Filter

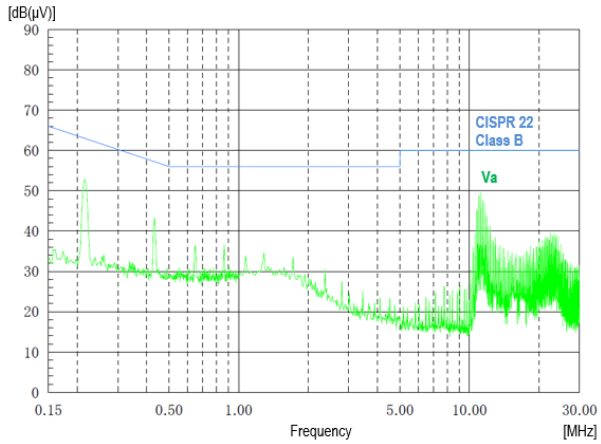

Conduction Noise (Vin=48V, Iout=5.1A, Ta=+25°C)
with External Input Filter

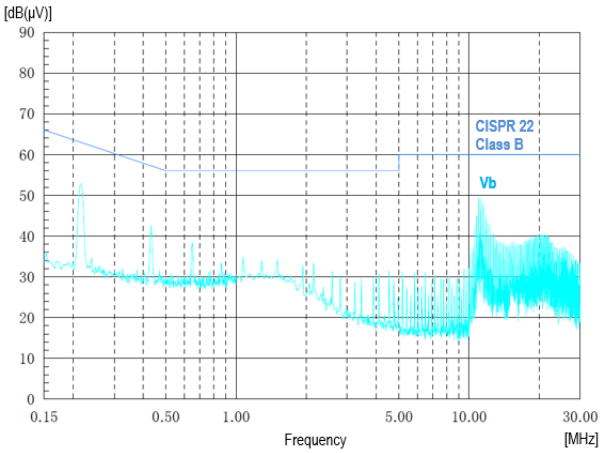

Thermal Derating
Unit under test (UUT) is covered by acrylic box to avoid airflow.
(Vin=42.5-57V, See Technical Notes)

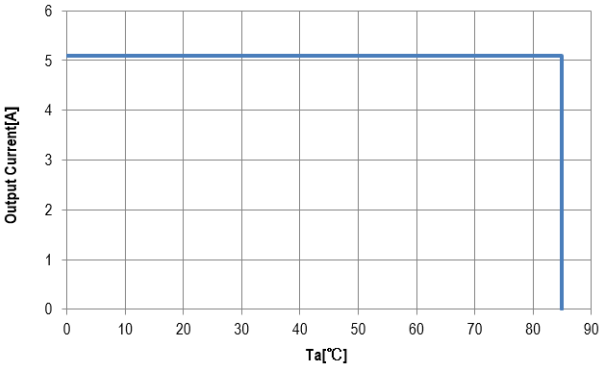

Downloaded from Arrow.com.

MECHANICAL SPECIFICATIONS

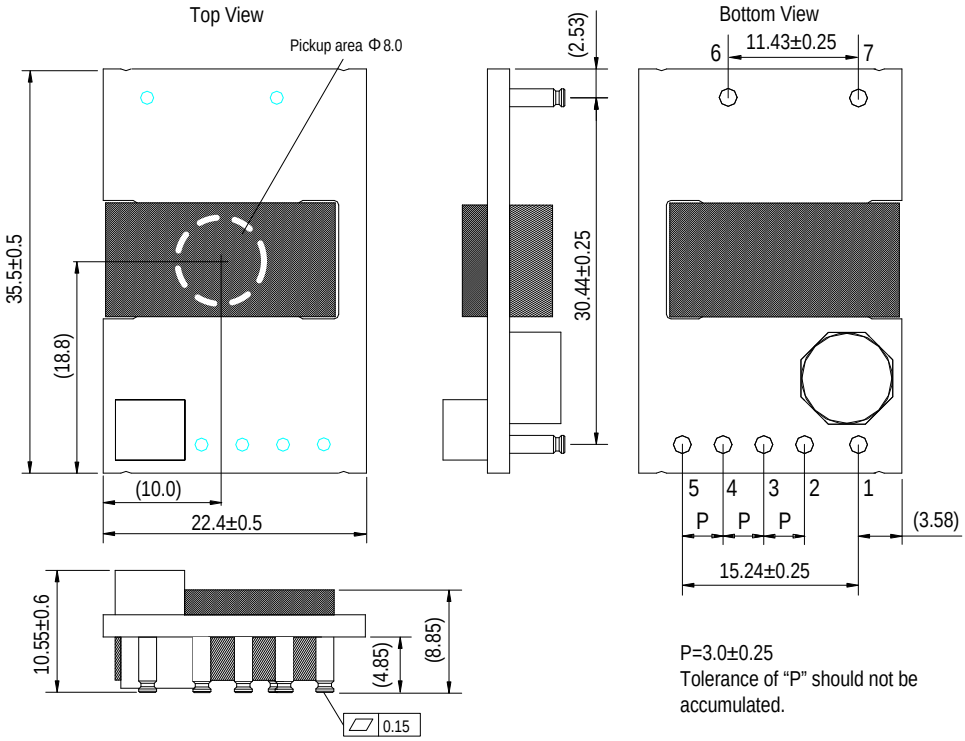

P=3.0±0.25
Tolerance of "P" should not be accumulated.

[Unit:mm]

INPUT / OUTPUT CONNECTIONS			
Pin	Designation	Function	Pin size
1	+Vin	Positive Input Voltage	Φ1.57
2	DEN	Detection and Enable	Φ1.57
3	T2P	Type-2 PSE Indicator	Φ1.57
4	VC	Controller Voltage	Φ1.57
5	-Vin	Negative Input Voltage	Φ1.57
6	-Vout	Negative Output Voltage	Φ1.57
7	+Vout	Positive Output Voltage	Φ1.57

RECOMMENDED FOOTPRINT (TOP VIEW)

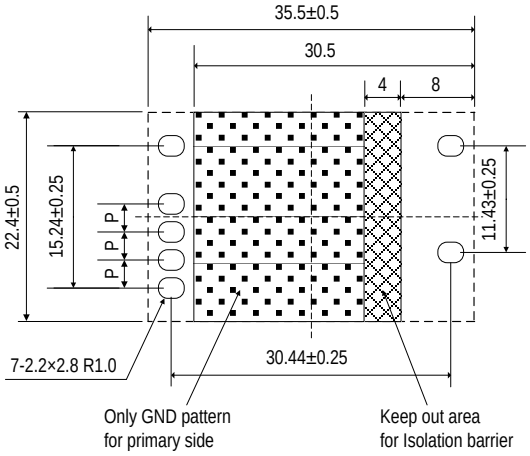

P=3.0±0.25
Tolerance of "P" should not be accumulated.

[Unit : mm]

Downloaded from Arrow.com.

PACKAGING INFORMATION (SURFACE MOUNT, MSL Rating 2)

Packaging form
The products are placed in the Emboss Tape as below

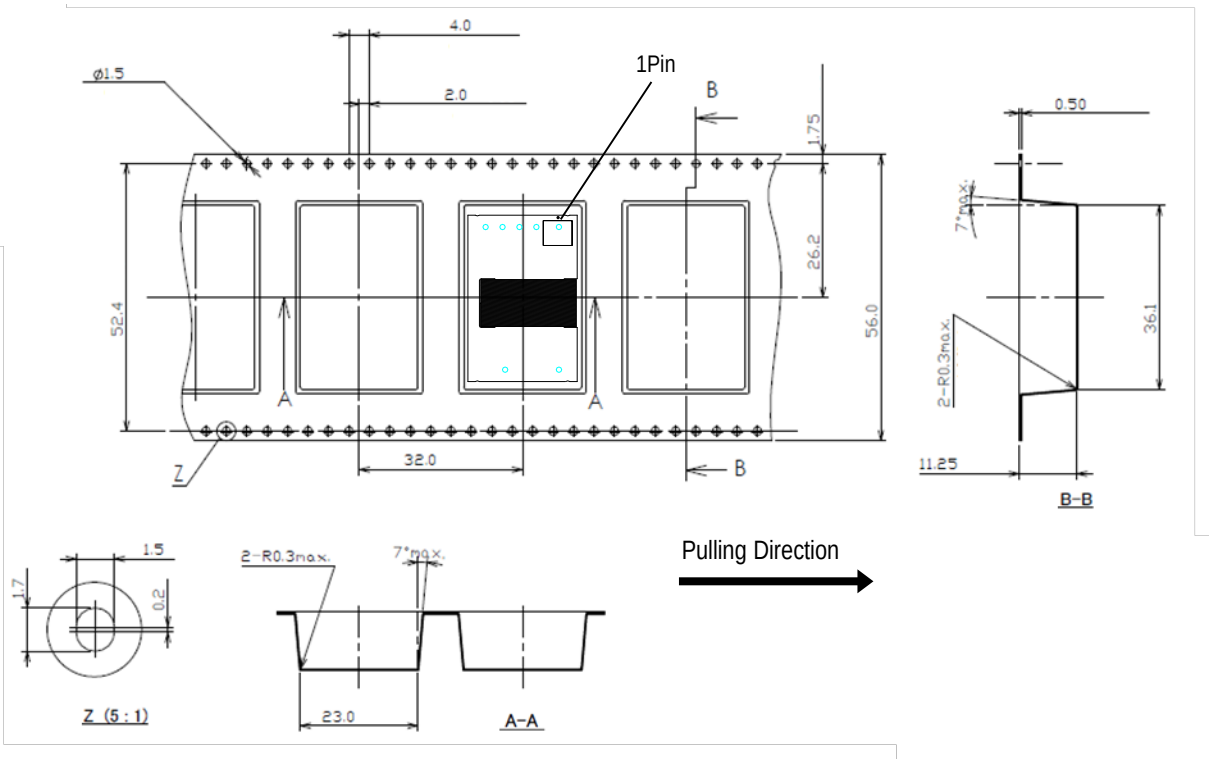

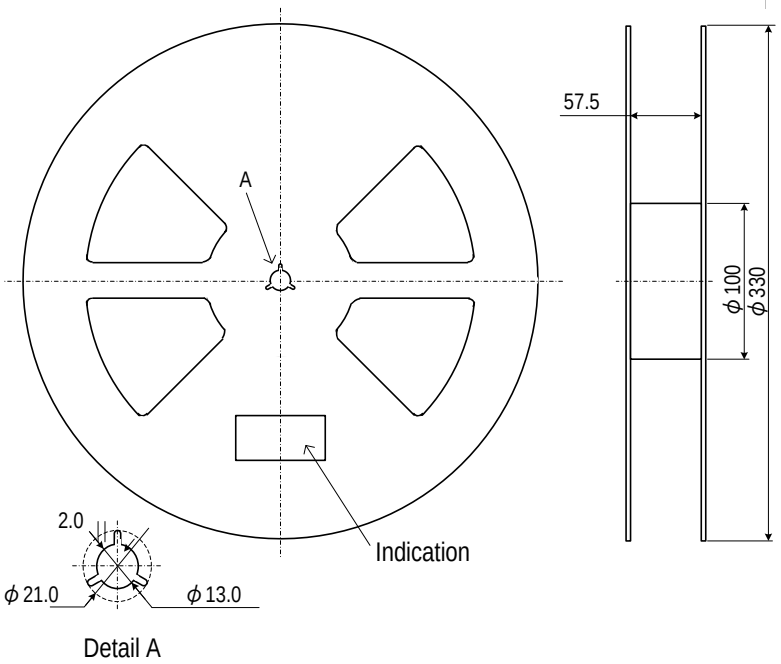

[Unit:mm]

Downloaded from Arrow.com.

PACKAGING INFORMATION (SURFACE MOUNT, MSL Rating 2)

Packaging form
Taping Specification

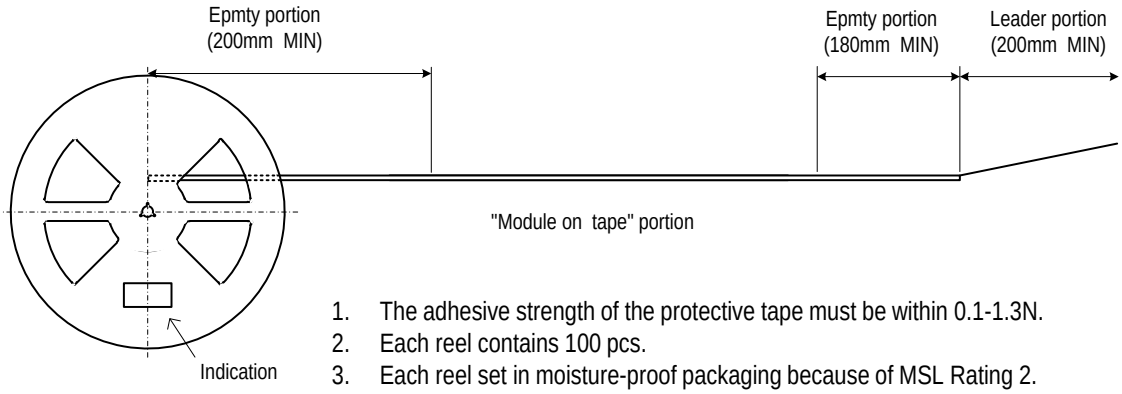

1. The adhesive strength of the protective tape must be within 0.1-1.3N.
2. Each reel contains 100 pcs.
3. Each reel set in moisture-proof packaging because of MSL Rating 2.
4. The deficiency per reel is 0 piece.
5. The reel shows customer part number, Murata part number and quantity.
6. The color of reel is not designated.

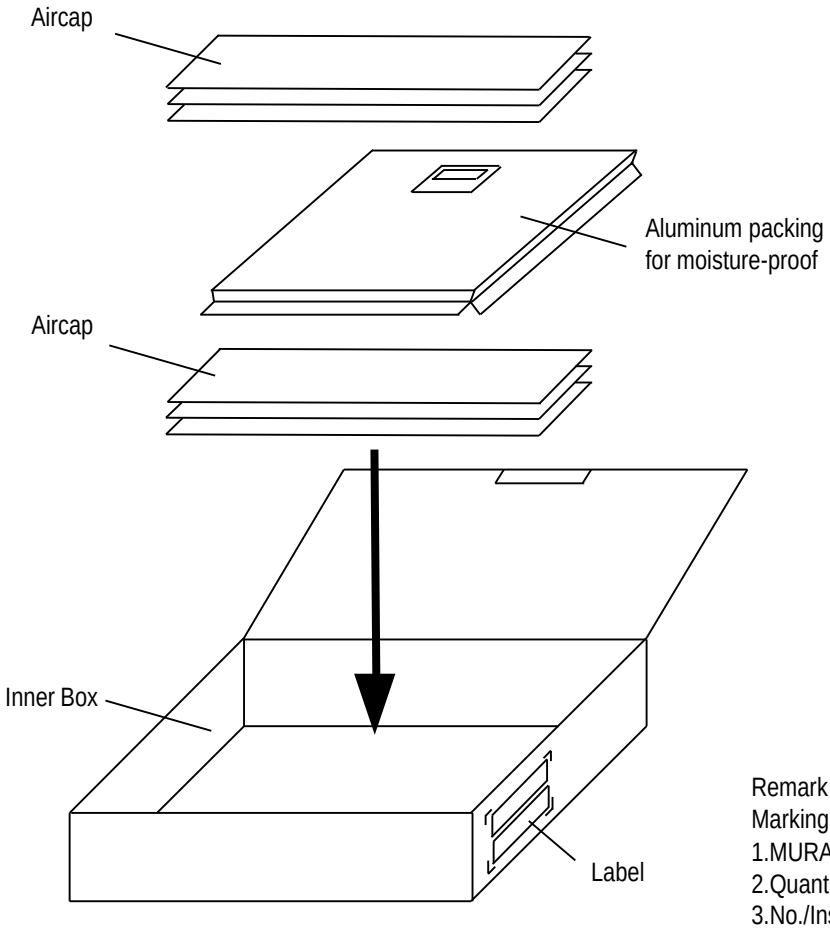

Remark
Marking on the box and real
1.MURATA Parts Number
2.Quantity
3.No./Inspection No.
4.ROHS -Y

Downloaded from Arrow.com.

TECHNICAL NOTES

Over Current Protection

Over Current Protection operates with a controller circuit failure or over-load condition, and DC-DC converter will enter hiccup mode. After rejected the abnormal mode, DC-DC converter will automatically restart.

External Input Capacitor

Do not connect any capacitor between positive input and negative input to avoid large inrush current. It is one of the requirements of IEEE802.3at standard.

Test Circuit

The initial values in Functional Specification are measured in the following test circuit.

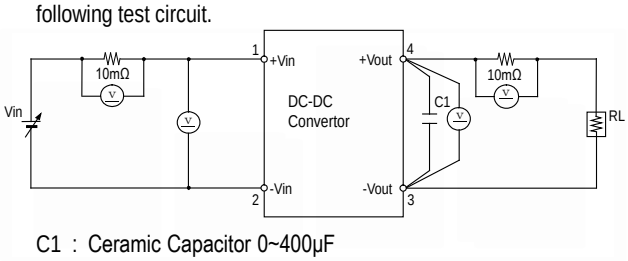

C1 : Ceramic Capacitor 0~400μF
RL : Electronic Load Device : LN-1000A-G7 KEISOKU GIKEN equivalent
Vin : DC Power Supply :Model HP6675A KEYSIGHT equivalent
Ⓥ : Digital Multimeter :Model HP34401A KEYSIGHT equivalent

When deviating from the above, DC-DC converter may operate abnormally. It should be fully confirmed on your board before use.

Ripple Noise Test

Output ripple noise is measured using designated external output components, circuits and layout as shown below.

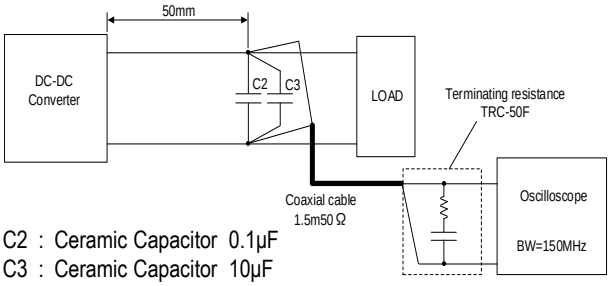

C2 : Ceramic Capacitor 0.1μF
C3 : Ceramic Capacitor 10μF

Conduction Noise

The external input filter is installed and the circuit diagram is shown below.

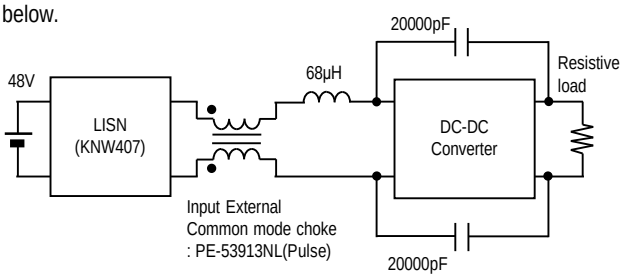

Type2 PSE Indicator

T2P(Pin3) is open drain output. After 2 event classification, MYBSP0122BABFT / MYBSP0055AABFT pulls T2P low. Please pull up T2P by VC(Pin4). VC is source only for T2P. Do not apply VC for any other purpose. Appropriate board design for isolation barrier is required(Opto-coupler selection and Isolation distance). Also consider CTR of Opto-coupler which may affect value of R1. Keep T2P and VC open if you don't apply this function. Typical application circuit is below.

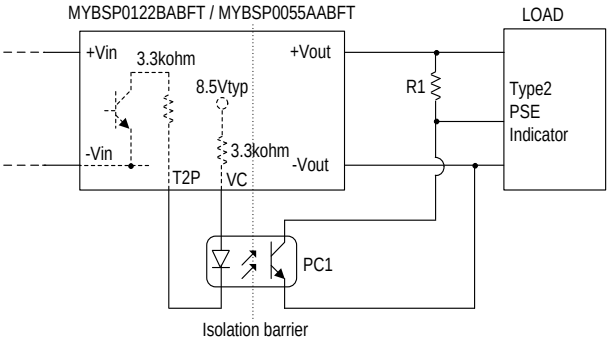

Example
R1: MYBSP0122BABFT: 33kohm 0.1W
MYBSP0055AABFT: 15kohm 0.1W
PC1: TLP293(GRH (TOSHIBA)

Classification	Type2 PSE Indicator
1-event	High
2-event	Low

Adapter ORing

DEN(Pin2) handles Enable / Disable of MYBSP0122BABFT / MYBSP0055AABFT. In case of applying external power output by adapter, MYBSP needs to be disable. Connecting DEN to –Vin disable MYBSP. There is limitation for voltage from adapter. Please see chart next page. Keep open if you don't use this function. Typical application circuit is below.

Downloaded from Arrow.com.

Limitation for adapter voltage

P/N	Acceptable voltage range from Adapter at Vout of MYBSP
MYBSP0122BABFT	10.0 – 12.8V
MYBSP0055AABFT	4.5 – 5.05V

Thermal Derating Condition

The output current is limited by the derating curve. The derating curve in this datasheet illustrate typical operation under a variety of conditions.

DC-DC Converter is tested on a 101.6x188mm, 2 layers Copper evaluation board at Vin=48V.
The Unit Under Test (UUT) is set up as shown below.
UUT is covered by acrylic box to avoid airflow.
The temperature measurement points are shown below table. The temperature of measurement points should not exceed the maximum temperatures in the below table.

Position	Description	Max temperature
P1	FET	T_{P1MAX} = 124°C
P2	FET	T_{P2MAX} = 124°C
P3	Opto-coupler	T_{P2MAX} = 105°C
P4	Transformer pattern	T_{P3MAX} = 125°C

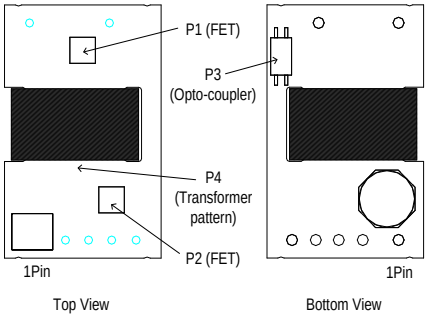

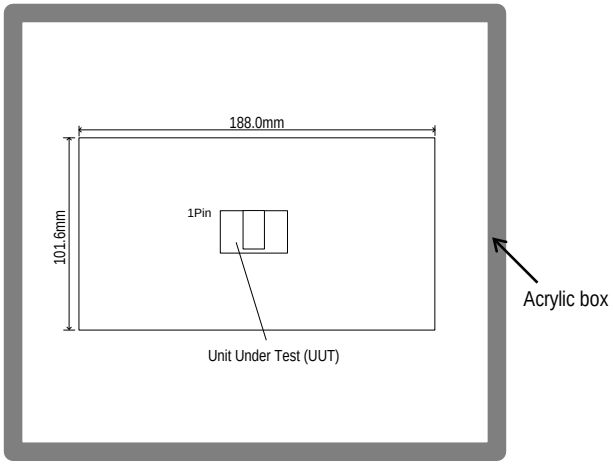

Detection and Hardware Classification

DC-DC converter implements IEEE 802.3at compliant detection and hardware classification.
When DC-DC converter(PD) is connected to PSE, the PSE applies two voltages in the range of 2.8 V to 10 V and measures the corresponding current. Connection to PD is detected by measured current.(Detection)
After Detection, the PSE applies voltage in the range of 15.5 V to 20.5 V and measures the corresponding current. PD is classified by measured current.(Hardware Classification)
Please check with your application.

SMT Reflow Soldering Guidelines

The surface-mount reflow solder profile is shown below.
This graph should be used only as a guideline.

Reflow Soldering Profiles : JEDEC IPC/JEDE J-STD-020D

Soldering temperature	245°C +0/-5°C
Soldering time	30 seconds, 240°C-245°C
Heating time	60～150 seconds, 217°C min.
Preheat time	60～120 seconds, 150°C-200°C
Programming rate	3°C /sec.max., 217°C-245°C
Descending rate	6°C /sec.max.
Total soldering time	8 minutes max.,25°C-245°C
Time	1time

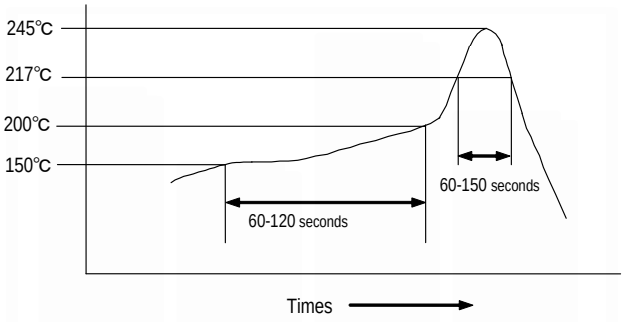

Do not vibrate for the products on reflow. Please need to take care temperature control because mounted parts may come off if the product is left under the high temperature. Do not mount on backside of the board.
Many other factors influence the success of SMT reflow soldering. Since your production environment may differ, please thoroughly review these guidelines with your process engineers.

Downloaded from Arrow.com.

Functional Specifications

Please contact Murata Sales before using this product for the applications listed below. These are applications that require very high reliability of prevention of defects which might directly cause damage to third party's life, body, or property.

1. Aircraft equipment
2. Aerospace equipment
3. Undersea equipment
4. Power plant control equipment
5. Medical equipment
6. Transportation equipment (cars, buses, trucks, trains, ships, etc.)
7. Traffic signal equipment
8. Disaster prevention /crime prevention equipment
9. Data-processing equipment
10. Application of similar complexity and /or reliability listed as above.

Storage

Please store this product in an environment where the temperature/humidity is stable in the range 0 to 40°C/10 to 75%RH and no direct sunlight. Use the product within 6 months after delivery.

Please avoid storage conditions where humidity and temperature change rapidly, as that may cause condensation on the product, which might degrade the quality of the product.

Please do not store the product environments that are dusty, in direct exposure to sea breeze, or in an atmosphere containing corrosive gas (Cl2, NH3, SO2, NOX and so on).

Operational environment and operational conditions

This product is not chemical-proof or rust-proof.

In order to prevent this product from leakage of electricity and/or abnormal temperature increase, do not use the product under the following circumstances:

(1) in an atmosphere containing corrosive gas (Cl2, NH3, SO2, NOX and so on).
(2) in a dusty place.
(3) in a place exposed to direct sunlight.
(4) in such a place where water splashes or in such a humid place where water condenses.
(5) in a place exposed to sea breeze.
(6) in any other places similar to the above (1)through (5).

Operational Conditions

Please use the product within specified values (power supply, temperature, input, output and load condition etc.). Input voltage drops for line impedance, so please make sure that input voltage is within in specified values.

If the product is used over the specified values, it may damage the product, reduce the quality, and even if the products can endure the condition for short time, it may cause degradation of the reliability.

Note Prior to use

If you apply high static electricity, voltage higher than rated voltage or reverse voltage to the product, it may cause defects in the products or degrade the reliability.

Please avoid the following items:

1. Over rating power supply, reverse power supply or not-enough connection of input voltage and 0V(DC)line
2. Electrostatic discharge by production line and/or operator
3. Electrified product by electrostatic induction

Do not subject product to excessive mechanical shock. If you drop the product on the floor it might cause a crack to the core of inductors and monolithic ceramic capacitors.

Also please pay attention to handling; the mounted parts can be dislodged if subjected to excessive force.

Transportation

If you transport the product, please pack it so that the package will not be damaged by mechanical vibration or mechanical shock, and please educate and guide the carrier to prevent rough handling.

Note

1. Please make sure that the product has been evaluated and confirmed against your specifications when it is mounted to your product.
2. All the items and parameters in this product specification have been prescribed on the premise that our product is used for the purpose, under the conditions and in the environment agreed upon between you and us. You are requested not to use our product deviating from such agreement.
3. We consider it not appropriate to include other terms and conditions for transaction warranty in product specifications, drawings or other technical documents. Therefore, if your technical documents as above include such terms and conditions as warranty clause, product liability clause, or intellectual property infringement liability clause, we will not be able to accept such terms and conditions unless they are based on the governmental regulation or they are stated in a separate contract agreement.

This product is subject to the following operating requirements and the Life and Safety Critical Application Sales Policy:
Refer to: https://power.murata.com/en/requirements

Murata Manufacturing Co., Ltd makes no representation that the use of its products in the circuits described herein, or the use of other technical information contained herein, will not infringe upon existing or future patent rights. The descriptions contained herein do not imply the granting of licenses to make, use, or sell equipment constructed in accordance therewith. Spec and cautions are subject to change without notice.
© 2018 Murata Manufacturing Co., Ltd

Downloaded from Arrow.com.