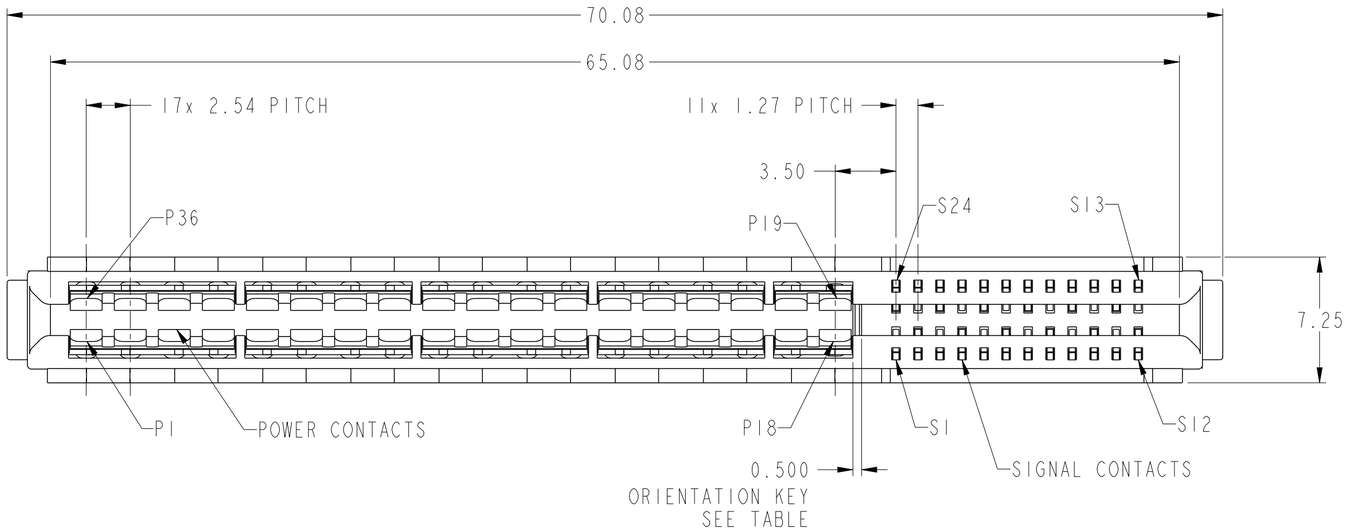

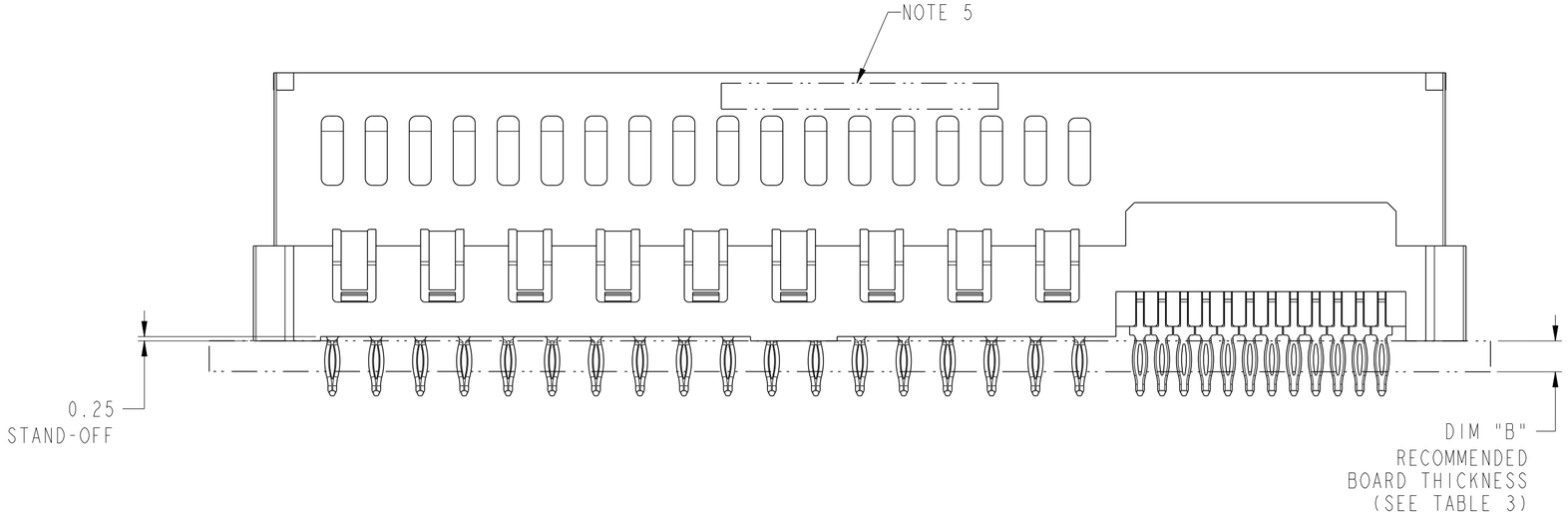

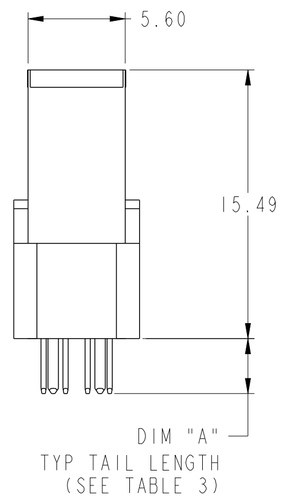

spec ref -			dr	Hai-Ling Liu	2014/07/10	projection	MM	size A2 / scale 4:1
tolerance std - ASME Y14.5	TOLERANCES UNLESS OTHERWISE SPECIFIED		eng	Hai-Ling Liu	2014/07/23			ecn no -
			chr	-	-			
			appr	Pei-Ming Zheng	2014/07/23	product family	CARD EDGE	rel level Released
surface -	linear	0.X	±0.5	FCI	title	VERTICAL RECT(36P-24S) NO PLASTIC PEG HIGH POWER CARD EDGE	dwg no 10130910	rev A
		0.XX	±0.25					
		0.XXX	±0.10					
ASME Y14.5	angular	0°	±2°	www.fci.com	cat. no. -	Product - Customer Drw		sheet 1 of 4

Copyright FCI.

Downloaded from Arrow.com.

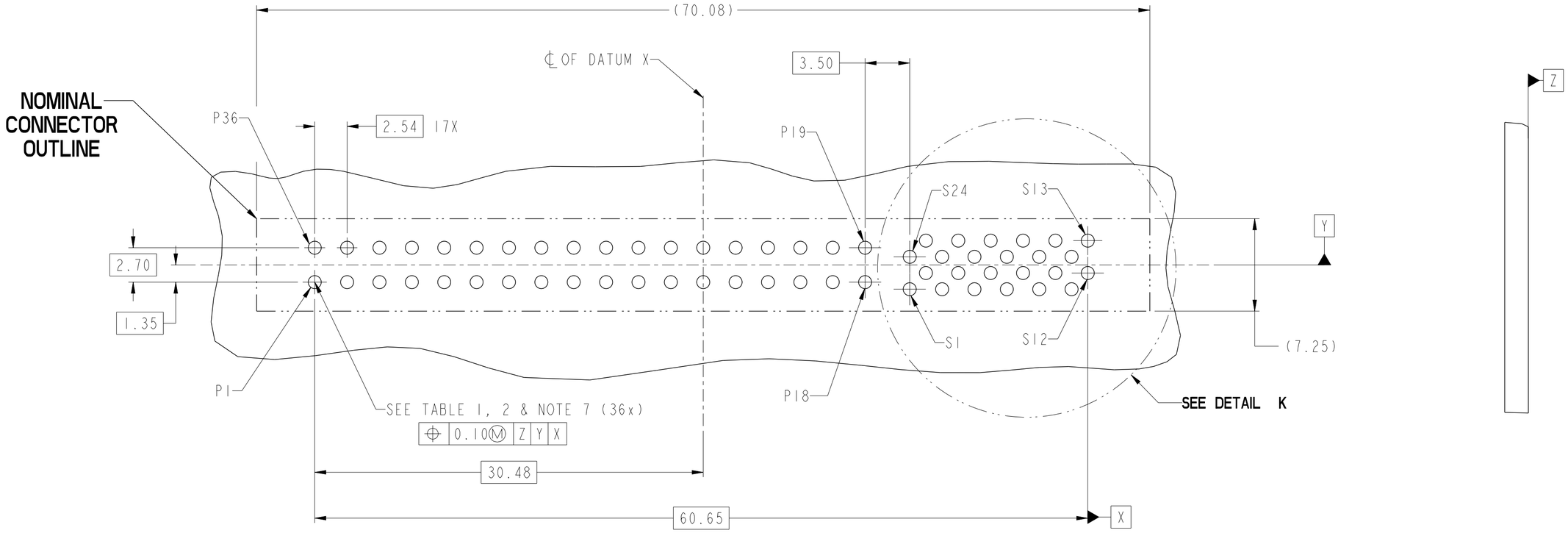

RECOMMENDED PCB
DIMENSION TOLERANCE ± 0.05mm

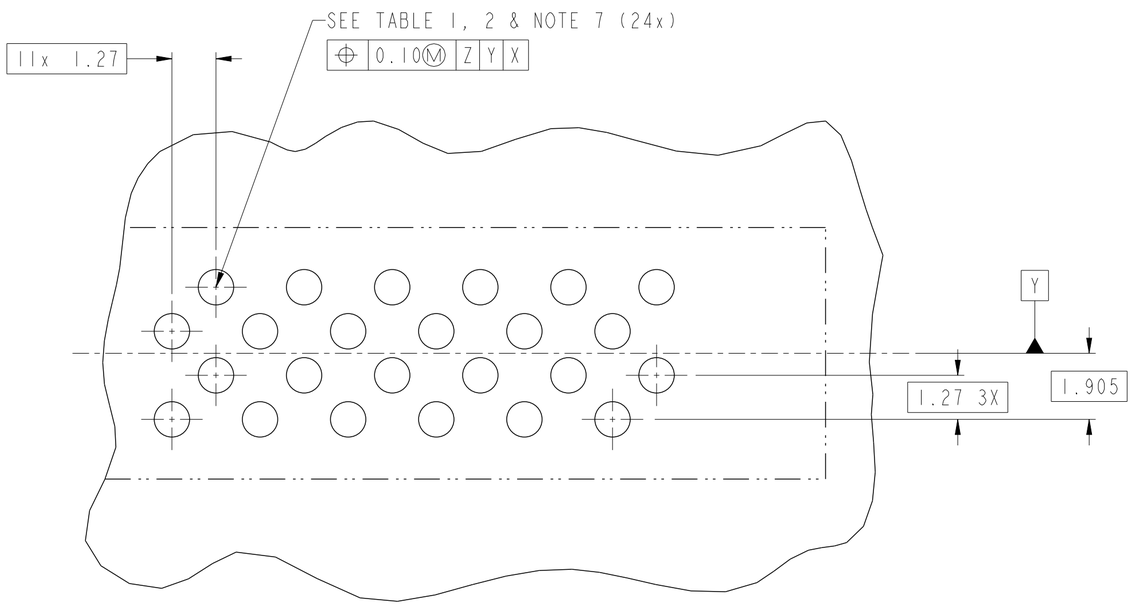

DETAIL K
SCALE 8:1

RECOMMENDED PCB LAYOUT
VIEWED FROM CONNECTOR SIDE

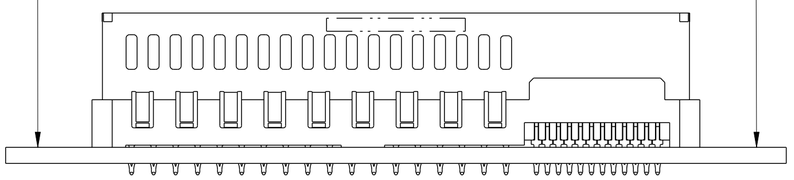

dr	Hai-Ling Liu	2014/07/10	projection	MM	size A2	scale 4:1
eng	Hai-Ling Liu	2014/07/23			ecn no	-
chr	-	-				
appr	Pei-Ming Zheng	2014/07/23	product family	CARD EDGE	rel level	Released
title	VERTICAL RECT(36P-24S) NO PLASTIC PEG HIGH POWER CARD EDGE				dwg no 10130910	rev A
www.fci.com	cat. no. -		Product - Customer Drw			sheet 2 of 4

Copyright FCI.

Downloaded from Arrow.com.

CONTACT TYPE	TOP LAYER DESCRIPTION	TABLE 1 (HPCE / SOLDER TAILS) PLATED THROUGH-HOLE REQUIREMENTS				
		DRILLED HOLE DIAMETER	COPPER THICKNESS	TIN-LEAD THICKNESS	TIN THICKNESS	FINISHED HOLE DIAMETER
POWER & SIGNAL	TIN-LEAD	1.10-1.16 (1.15 DRILL)	0.025 - 0.050	0.005 - 0.015	--	0.94 - 1.10
	IMMERSION TIN	1.10-1.16 (1.15 DRILL)	0.025 - 0.050	--	0.9 - 1.5um	0.94 - 1.10
	COPPER	1.10-1.16 (1.15 DRILL)	0.025 - 0.050	--	--	0.94 - 1.10

CONTACT TYPE	TOP LAYER DESCRIPTION	TABLE 2 (HPCE / PRESS-FIT TAILS) PLATED THROUGH-HOLE REQUIREMENTS				
		DRILLED HOLE DIAMETER	COPPER THICKNESS	TIN-LEAD THICKNESS	TIN THICKNESS	FINISHED HOLE DIAMETER
POWER & SIGNAL	TIN-LEAD	0.81-0.86 (0.85 DRILL)	0.025 - 0.050	0.005 - 0.015	--	0.65 - 0.80
	IMMERSION TIN	0.81-0.86 (0.85 DRILL)	0.025 - 0.050	--	0.9 - 1.5um	0.70 - 0.80
	COPPER	0.81-0.86 (0.85 DRILL)	0.025 - 0.050	--	--	0.70 - 0.80

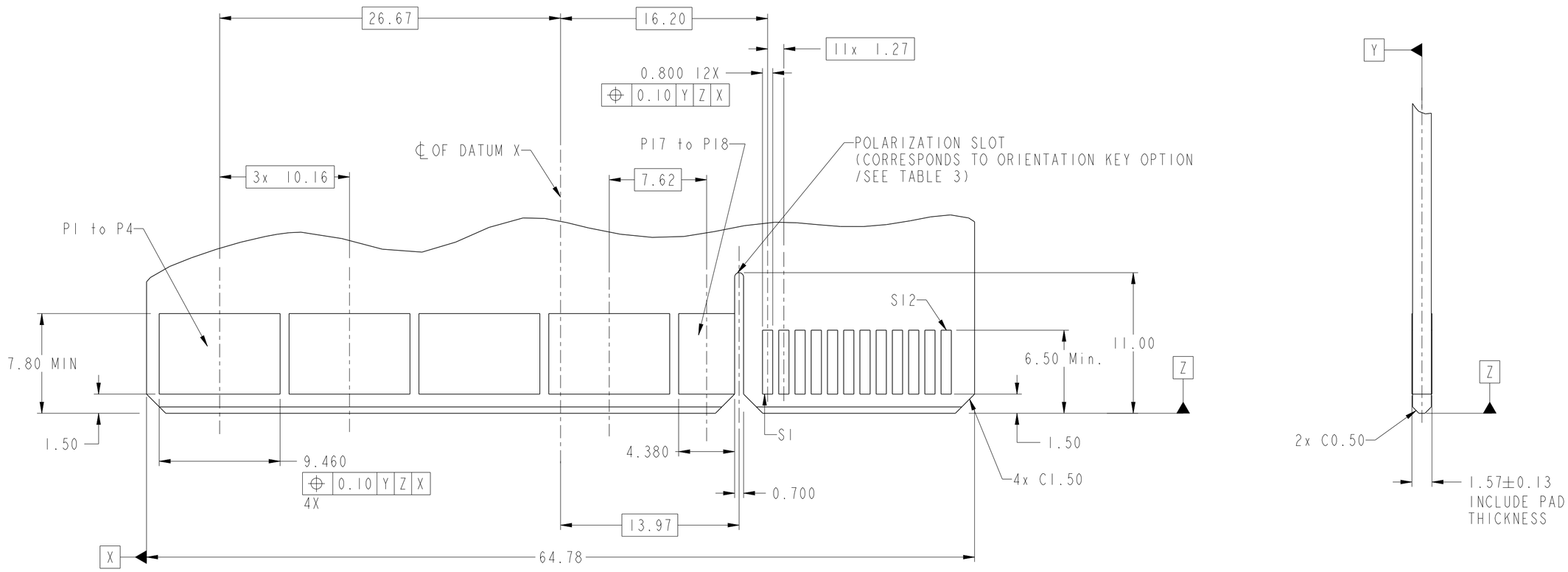

RECOMMENDED MATING BOARD
FOOTPRINT
DIMENSION TOLERANCE ± 0.05mm

dr	Hai-Ling Liu	2014/07/10	projection	MM	size A2 / scale 4:1
eng	Hai-Ling Liu	2014/07/23			ecn no -
chr	-	-			
appr	Pei-Ming Zheng	2014/07/23	product family	CARD EDGE	rel level Released

title: VERTICAL RECT(36P-24S) NO PLASTIC PEG
HIGH POWER CARD EDGE

dwg no: 10130910 rev A

www.fci.com cat. no. - Product - Customer Drw sheet 3 of 4

Copyright FCI.

Downloaded from Arrow.com.

HPCE PART NUMBER (TABLE 3)

PART NUMBER	TAIL TYPE	ORIENTATION KEY	DIM "A" TYPICAL TAIL LENGTH	DIM "B" RECOMMENDED BOARD THICKNESS
10130910-001	SOLDER	YES	3.17 ±0.25	1.57 MIN
10130910-001LF	SOLDER	YES		
10130910-002	SOLDER	NO		
10130910-002LF	SOLDER	NO		
10130910-003	PRESS-FIT	YES		
10130910-003LF	PRESS-FIT	YES		
10130910-004	PRESS-FIT	NO		
10130910-004LF	PRESS-FIT	NO		

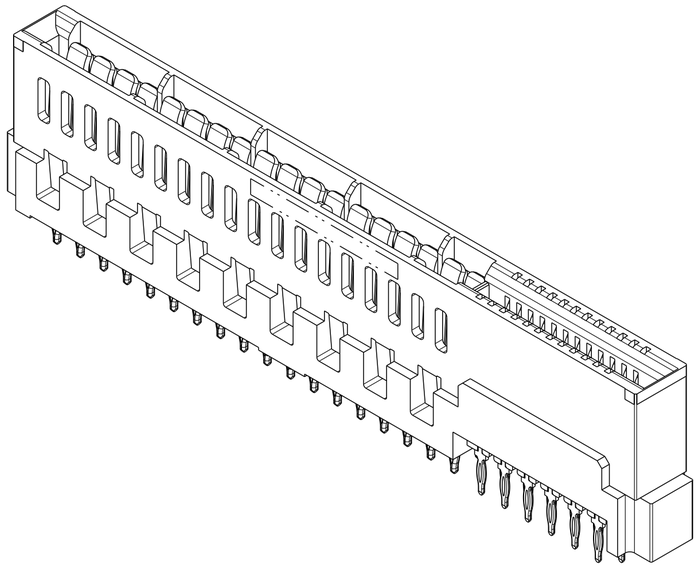

NOTES:

1. CONNECTOR MATERIALS:

   HOUSING: HIGH TEMPERATURE THERMO PLASTIC, BLACK
   UL 94V-0 COMPLIANT
   CONTACTS: HIGH PERFORMANCE COPPER ALLOY.

2. CONTACT FINISH REF. GS-12-604 SECTION 5.2.

3. PRODUCT SPECIFICATION: GS-12-604.

4. APPLICATION SPECIFICATION: GS-20-128.

5. PRODUCT MARKING (FCI - PART NUMBER & DATE CODE) ON HOUSING IN AREA SHOWN.

6. PACKAGING MEETS FCI SPECIFICATION GS-14-937.

7. ALL HOLE SIZES ARE FINISHED HOLE SIZES.

8. MOUNTING HOLES ARE UNPLATED
   Ø 2.40 +/- 0.1 FOR PRESS-FIT TAILS
   Ø 2.10 +/- 0.1 FOR SOLDER TAILS

dr	Hai-Ling Liu	2014/07/10	projection	MM	size A2 / scale 4:1
eng	Hai-Ling Liu	2014/07/23			
chr	-	-			ecn no -
appr	Pei-Ming Zheng	2014/07/23	product family	CARD EDGE	rel level Released
title	VERTICAL RECT(36P-24S) NO PLASTIC PEG HIGH POWER CARD EDGE		dwg no	10130910	rev A
www.fci.com	cat. no. -		Product - Customer Drw		sheet 4 of 4

Copyright FCI.

Downloaded from Arrow.com.