ITEM	Q'TY	PART NUMBER	PART DESCRIPTION
1	1	H-485C	Quad-Level 90° LED Holder
2	4	1.8BC-Y/G	1.8 Sub-Miniature Radial LED

REV.	DESCRIPTION	DATE	APPROVED
A	Engineering Release	10/21/08	T. Y.
B	Engineering Update w/o Changes	08/05/16	J. C.

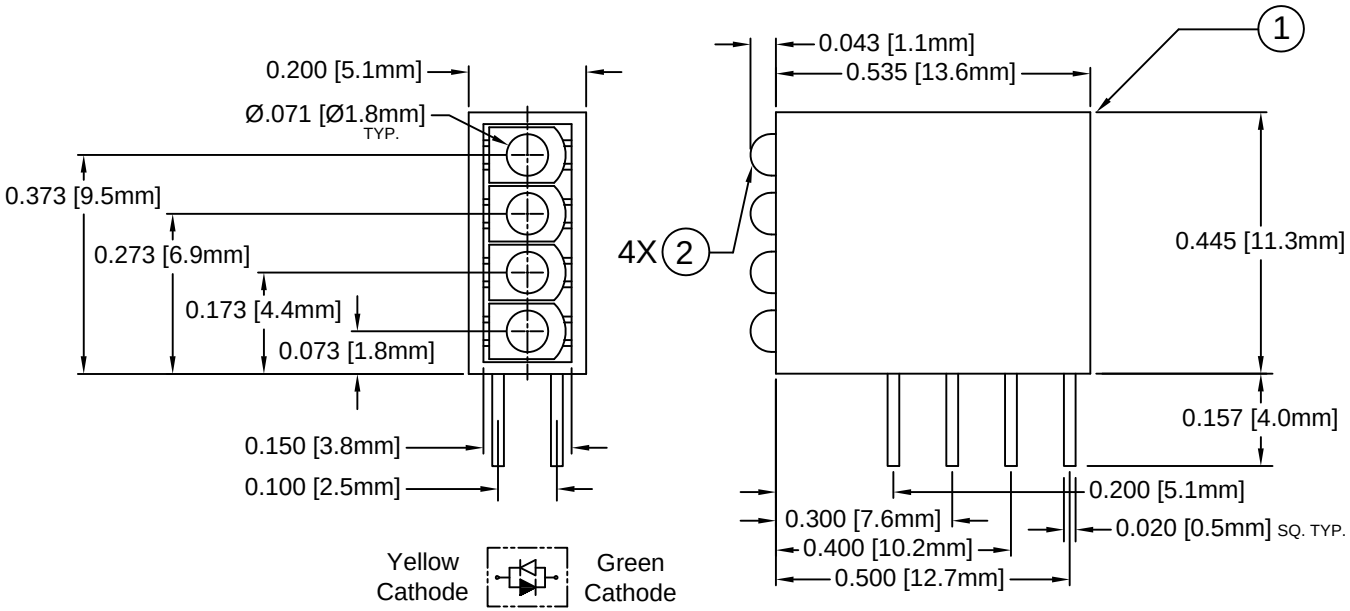

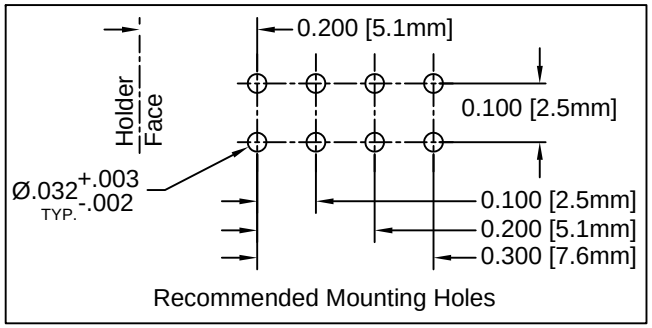

LED Part No.	Chip			Lens Appearance	Absolute Max. Ratings				Electro-Optical Data @ 20mA			Viewing Angle 2 Θ½ (Deg)
	Material	Peak Wave Length λp (nm)	Emitted Color		Δλ (nm)	Pd (mW)	If (mA)	Peak If (mA)	Vf (V)		Iv (mcd)	
									TYP	MAX	TYP	
1.8BC-Y/G	GaAsP/GaP	590	YELLOW	WHITE DIFFUSED	35	85	30	150	2.0	2.8	3.5	50
	GaP/GaP	568	GREEN		30	80	30	150	2.1	2.8	4.5	

ABSOLUTE MAXIMUM RATINGS (Ta = 25°C)

REVERSE VOLTAGE _____ 5V
REVERSE CURRENT (VR=5V) _____ 100μA
OPERATING TEMPERATURE RANGE _____ -25°C ~ 85°C
STORAGE TEMPERATURE _____ -30°C ~ 100°C
LEAD SOLDERING TEMPERATURE (1/16" FROM BODY) _____ 260°C for 5 Seconds

STANDARD TOLERANCE
(UNLESS OTHERWISE SPECIFIED)

DECIMALS		ANGULAR	
.X	± .1	X°	± 1°
.XX	± .02		
.XXX	± .010		

BIVAR®
4 THOMAS, IRVINE, CA. 92618
TEL: (949) 951-8808 FAX: (949) 951-3974

TITLE: 1.8mm QUAD-LEVEL 90° LED ASSY, REVERSE POLARITY

DESIGNED:	DATE:	PART NO:	REVISION:
R. Paje	10/21/08	H485CBC-Y/G-RP	B
CHECKED: F. Jensen	DATE: 10/21/08	CAGE CODE : 32559	SHEET # 1 OF 1

CAD GENERATED DOCUMENT. DO NOT MEASURE DRAWING.

Downloaded from Arrow.com.