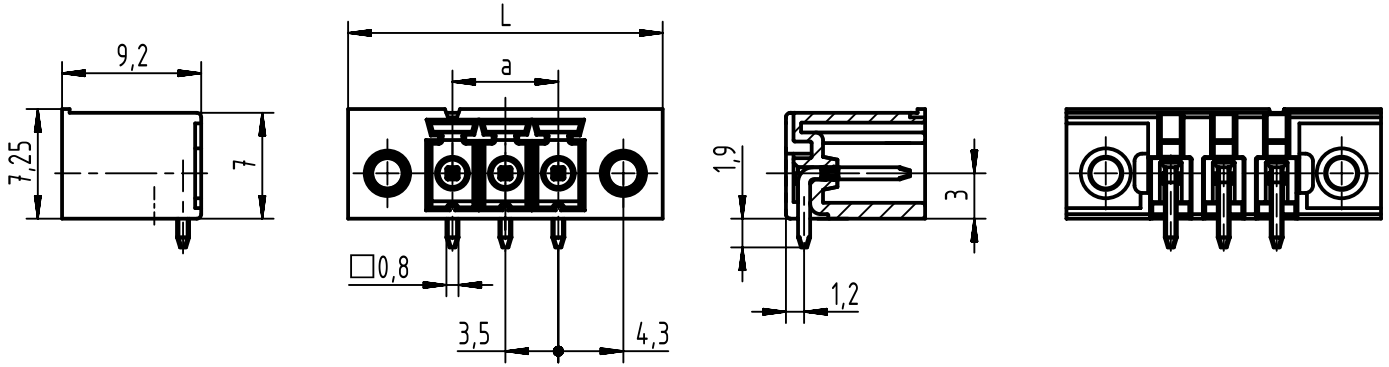

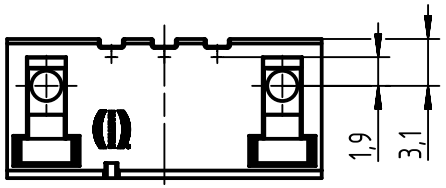

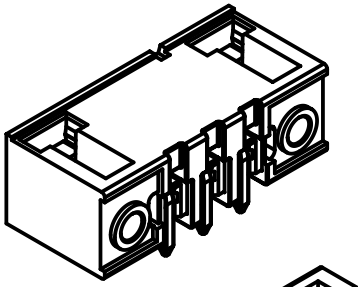

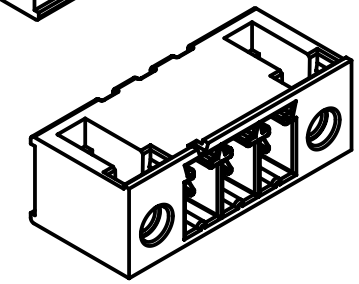

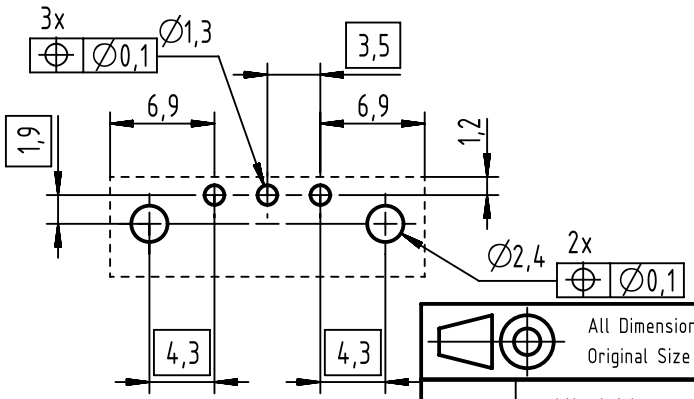

Part number	Poles	Dim. a	Dim. L
14120214006000	2	3,5	17,3
14120314006000	3	7	20,8
14120414006000	4	10,5	24,3
14120514006000	5	14	27,8
14120614006000	6	17,5	31,3
14120714006000	7	21	34,8
14120814006000	8	24,5	38,3
14120914006000	9	28	41,8
14121014006000	10	31,5	45,3
14121114006000	11	35	48,8
14121214006000	12	38,5	52,3
14121314006000	13	42	55,8
14121414006000	14	45,5	59,3
14121514006000	15	49	62,8
14121614006000	16	52,5	66,3
14121714006000	17	56	69,8
14121814006000	18	59,5	73,3
14121914006000	19	63	76,8
14122014006000	20	66,5	80,3
14122114006000	21	70	83,8
14122214006000	22	73,5	87,3

further information see DS 14121300201

All Dimensions in mm
Original Size DIN A4

Scale 2:1

Free size tol.

Ref.

Sub.

All rights reserved

Department EL PD

Created by ZHUANGJ

Inspected by LUOK

Standardisation HOFFMANN

Date 2020-03-25

State Final Release

Title har-flexicon 3.50 MTH-XX BK SL

Doc-Key / ECM-Nr. 100610821/UGD/000/C 500000169386

HARTING Electronics GmbH
D-32339 Espelkamp

Type TB

Number 1412XX14006000

Rev. C

Page 1/1

Downloaded from Arrow.com.

A4