TAOGLAS



Datasheet

Part No:
IP.1621.25.4.A.02

Description

4mm thick Iridium Patch Antenna

Features:

Single Feed Ceramic Patch
Covering: Iridium®
Dims: 25.0 x 25.0 x 4.0 mm
RoHS & Reach Compliant

Downloaded from Arrow.com.

1.	Introduction	3
2.	Specification	4
3.	Mechanical Drawing	5
4.	Evaluation Board	6
5.	Antenna Integration Guide	7
6.	Packaging	13
7.	Antenna Characteristics	14
8.	Radiation Patterns	18
	Changelog	20

Taoglas makes no warranties based on the accuracy or completeness of the contents of this document and reserves the right to make changes to specifications and product descriptions at any time without notice. Taoglas reserves all rights to this document and the information contained herein. Reproduction, use or disclosure to third parties without express permission is strictly prohibited.

Downloaded from Arrow.com.

1. Introduction



The Taoglas IP.1621.25.4.A.02 is a compact ceramic patch antenna designed for Iridium® satellite communication applications, delivering reliable performance in a miniaturized form factor. Utilizing Taoglas XtremeGain™ technology, the antenna is optimized to provide excellent signal reception while minimizing size, making it ideal for space-constrained devices requiring global satellite connectivity.

With its low-profile ceramic construction, the antenna can be easily integrated into a wide range of embedded and portable designs. The antenna is mounted using integrated pins and double-sided adhesive, enabling straightforward installation and secure placement within the device enclosure.

Typical Applications:

- Iridium® Satellite Communications
- Asset Tracking Devices
- Emergency Communication Systems
- Maritime Monitoring Equipment
- Remote Telemetry Systems
- Industrial IoT Devices
- Personal Satellite Communicators

The IP.1621.25.4.A.02 has been selected and optimized for its intended device environment to provide dependable Iridium® performance. The antenna is certified by Iridium® for commercial use with the Iridium Communications System, offering designers a trusted solution for satellite-enabled applications requiring compact size and reliable connectivity.

For integration support, performance testing, tuning services, or additional technical assistance, please contact your regional Taoglas customer support team.

Downloaded from Arrow.com.

2. Specification

Electrical								
Band	Frequency (MHz)	Efficiency (%)	Average Gain (dB)	Peak Gain (dBi)	Impedance	Polarization	Radiation Pattern	Max. input power
Iridium	1616-1627	87.6	-0.57	5.02	50 Ω	RHCP	Omni directional	2W
All testing was completed on a 70x70mm Ground Plane.								

Mechanical	
Dimensions	25.0 x 25.0 x 4.0mm
Weight	5g
Material	Ceramic
Pin Dimension	ψ0.9 x 2.4mm

Environmental	
Operation Temperature	-40°C to 85°C
Storage Temperature	-40°C to 85°C
Relative Humidity	Non-condensing 40°C 95% RH
Soldering Temperature	290°C for 3 seconds max.

Downloaded from Arrow.com.

3. Mechanical Drawing

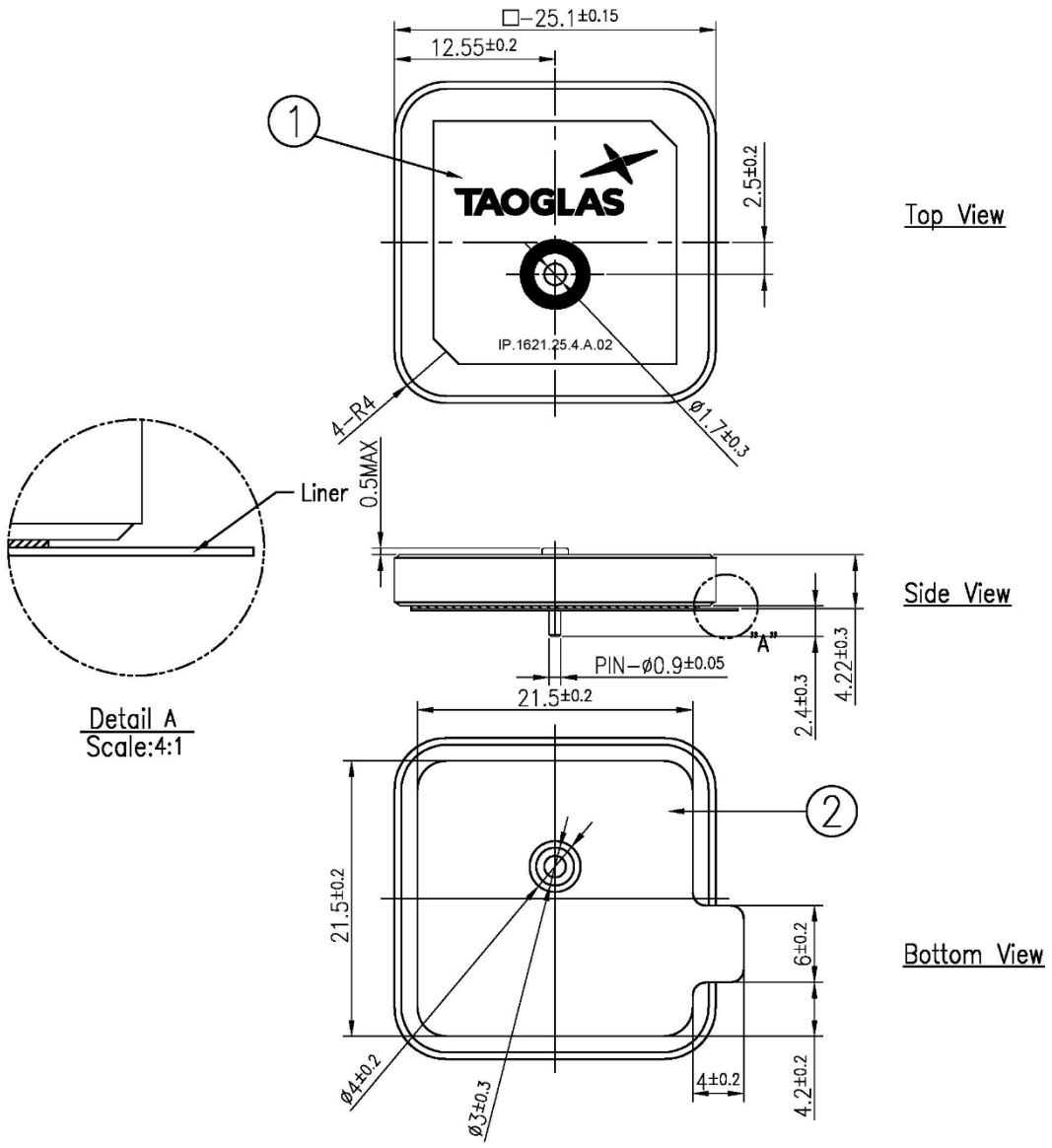

	Name	P/N	Material	Finish	QTY
1	IP.25A Iridium Patch(25.1x25.1x4mm)	001514C000007A	Ceramic	Clear	1
2	Double sided Adhesive	001013C180007A	NITTO 5015	White Linter	1

Downloaded from Arrow.com.

4. Evaluation Board

The IP.1621.25.4.A.02 is designed with 50.0 x 50.0 mm square metal plane, put the antenna at the center of the metal ground, and then the antenna will have excellent performance. The recommendation setup is shown as follows.

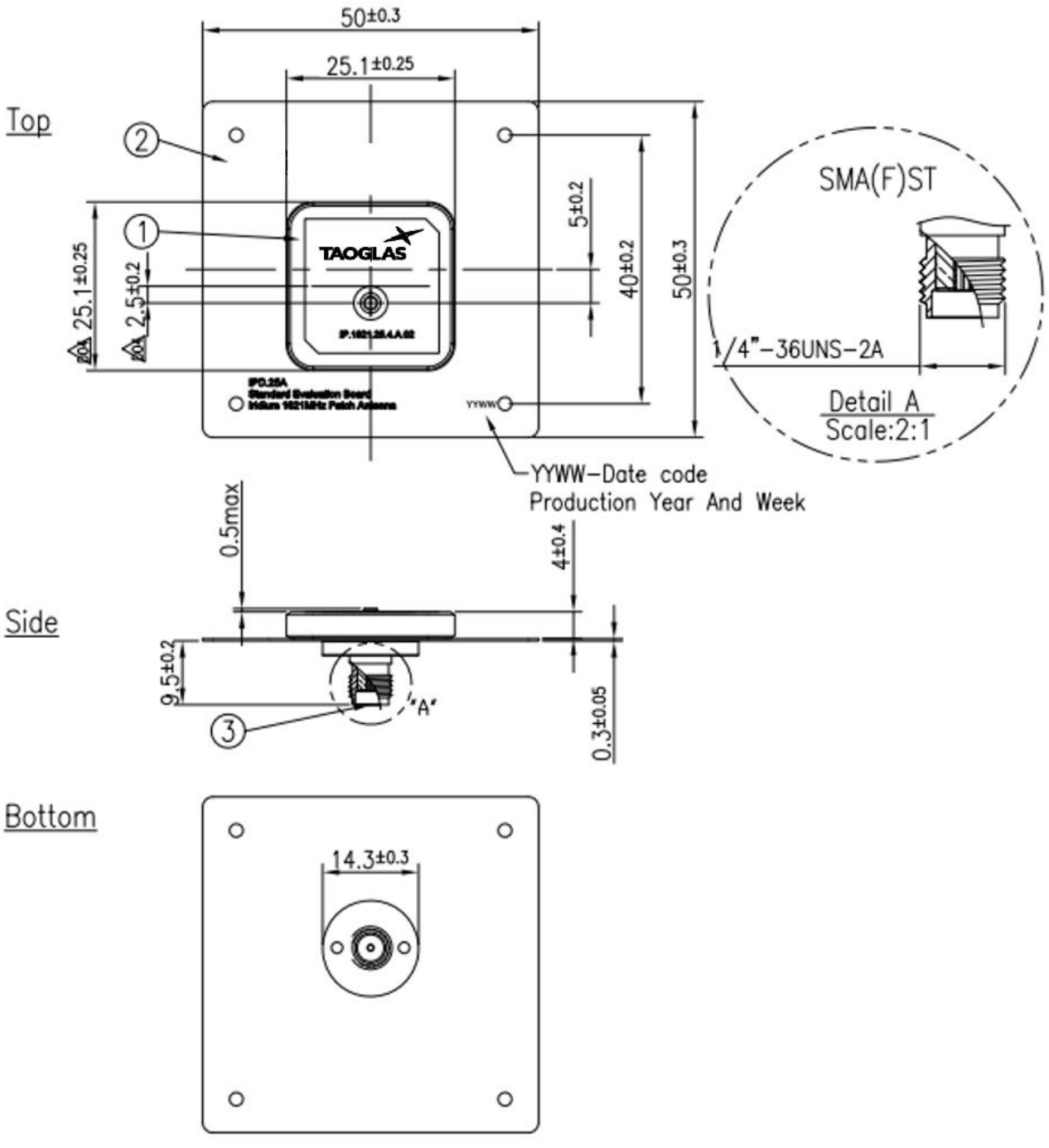

Downloaded from Arrow.com.

5. Antenna Integration Guide

The following is an example on how to integrate the IP.1621.25.4.A.02 into a design. This antenna has one pin, which is used for the RF Feed. Taoglas recommends using a minimum of 50x50mm ground plane (PCB) to ensure optimal performance.



Top view of PCB reference design

Please find the Integration files in Altium, 2D formats and the 3D model for the IP.1621.25.4.A.02 here: https://www.taoglas.com/product/ip-1621-25-4-a-02-iridium-patch-antenna-25mm

Downloaded from Arrow.com.

5.1 Schematic and Symbol Definition

The circuit symbol for the IP.1621.25.4.A.02 is shown below. The antenna has 1 pin as indicated below.

Pin	Description
1	RF Feed

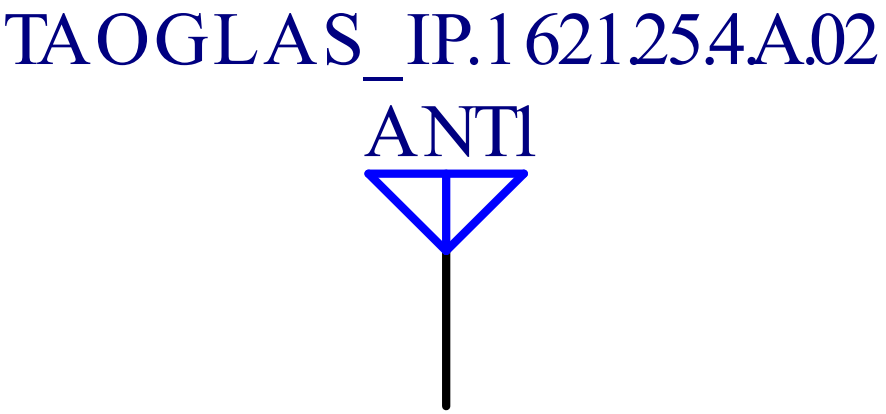

Above is a schematic symbol of IP.1621.25.4.A.02 and a table of the pin definitions.

Downloaded from Arrow.com.

5.2 Antenna Footprint

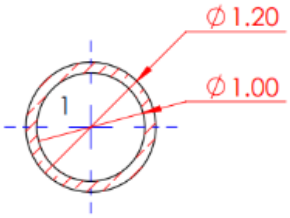

Top

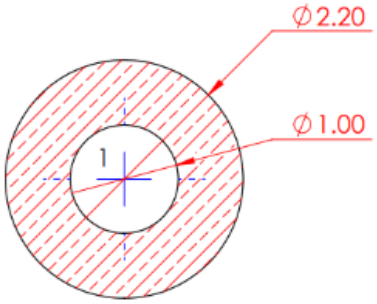

Bottom

Pin	Description
1	RF Feed

Downloaded from Arrow.com.

5.3 Copper Clearance

The footprint and clearance on the PCB must comply with the antenna's specification. The PCB layout shown in the diagrams below demonstrates the IP.1621.25.4.A.02 clearance area for Pin 1 (RF Feed Pad). The bottom copper keep out area only applies to the bottom layer and the top copper keep out area applies to all other layers.

There should be a Ø3mm copper clearance around the antenna pins on the top side of the PCB with a Ø3.5mm copper clearance around the antenna pins on the bottom side.

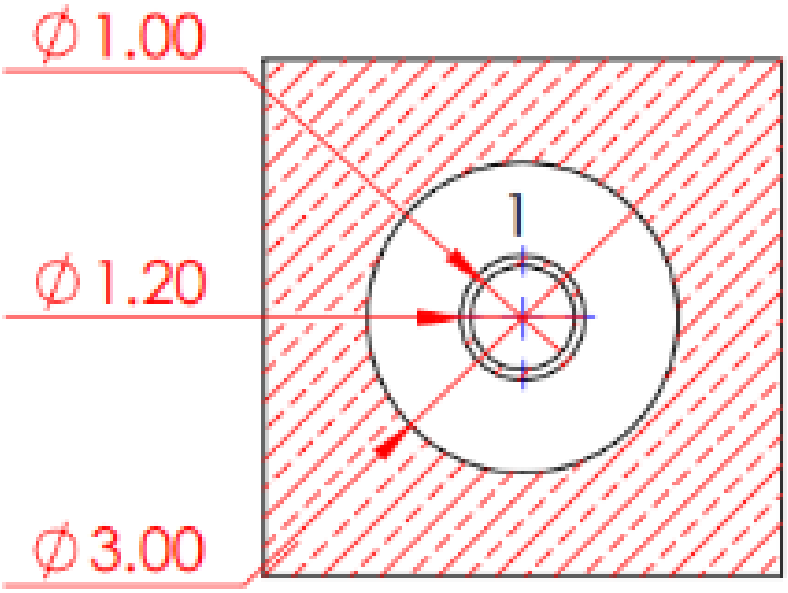

Top

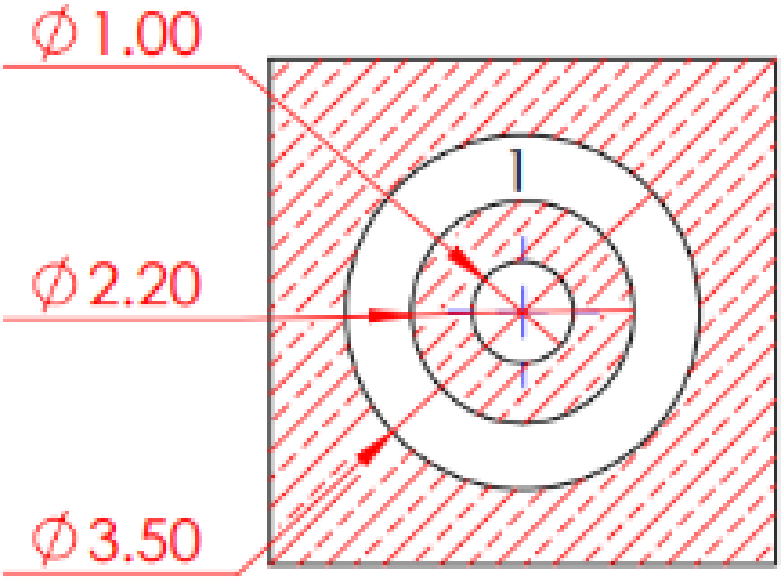

Bottom

Downloaded from Arrow.com.

5.4 Antenna Integration

The IP.1621.25.4.A.02 should be placed in the centre of the PCB to take advantage of the ground plane. The RF traces must maintain a 50 Ohm transmission line. Ground vias should be placed around the copper clearance area and the transmission line. Note that depending on the design application, tuning may be required for optimal performance. This may be achieved using a 'pi' matching network or custom tuning of the patch antenna.

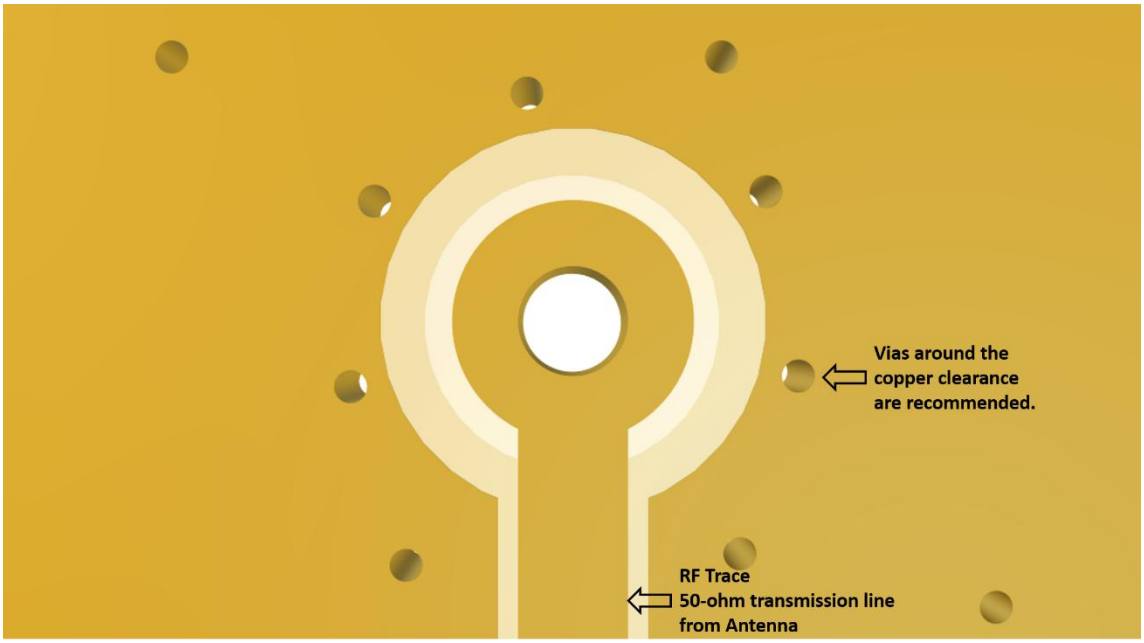

Bottom view of the PCB Reference Design, showing transmission lines and integration notes.

Downloaded from Arrow.com.

5.5 Final Integration

The bottom side image shown below highlights the antenna transmission line. Taoglas recommends using a minimum of 50x50mm ground plane to ensure optimal performance.

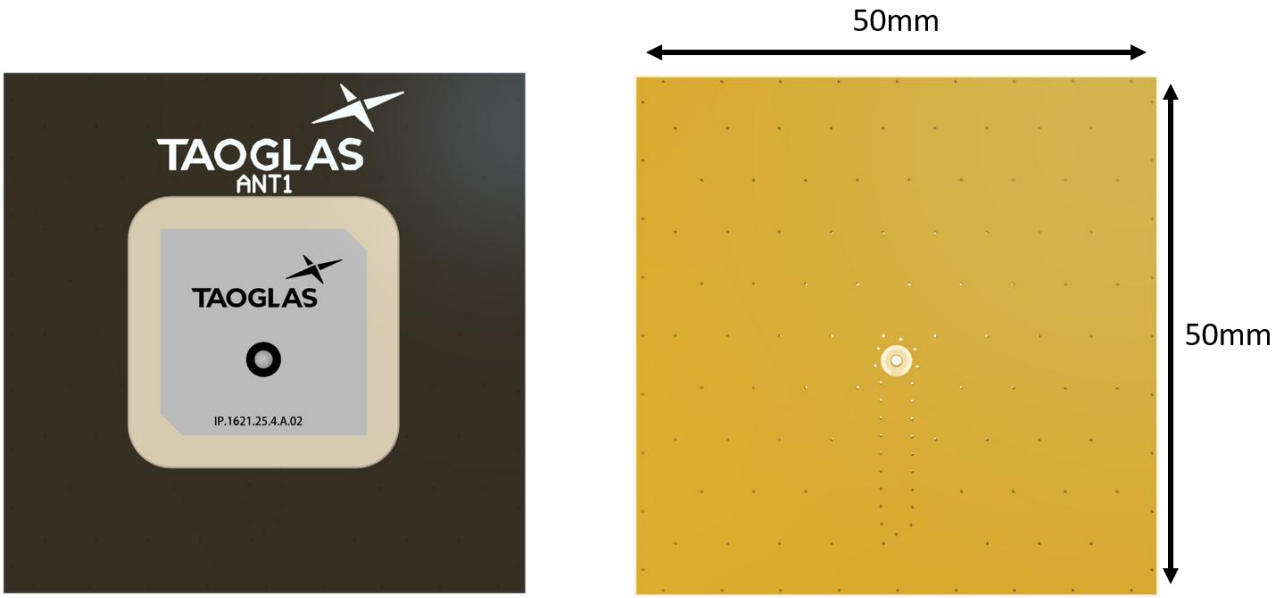

Top Side (50x50mm example PCB Reference Design)

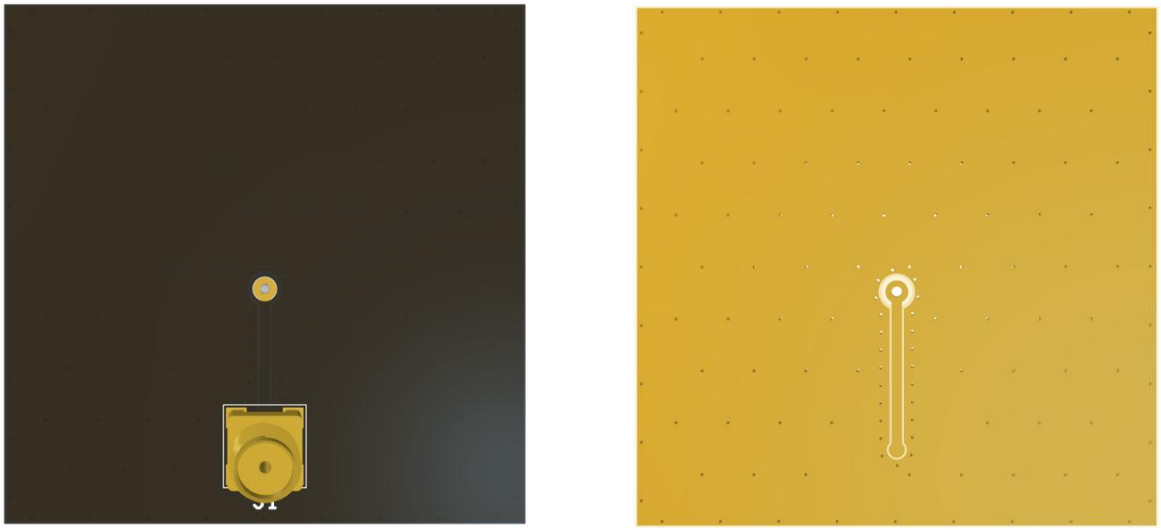

Bottom Side

Downloaded from Arrow.com.

6. Packaging

50 pcs per tray

200 pcs per Inner Carton

800 pcs per Carton

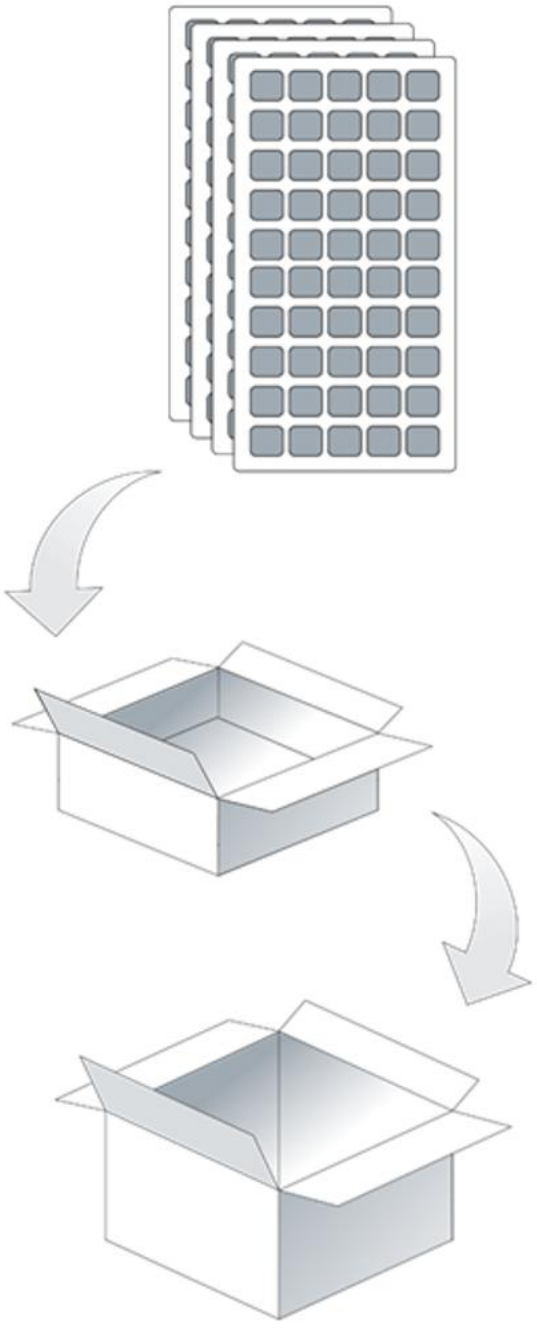

Downloaded from Arrow.com.

7. Antenna Characteristics

7.1 Test Setup

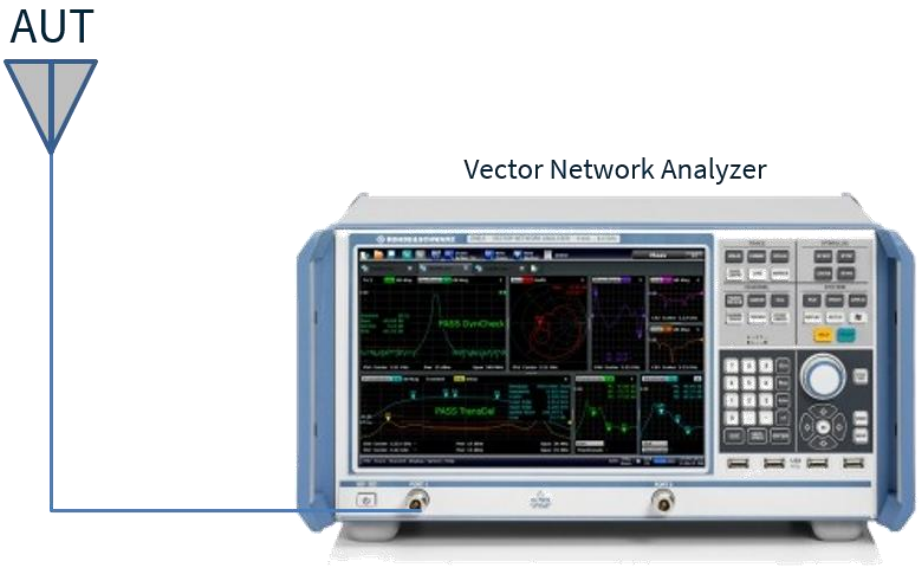

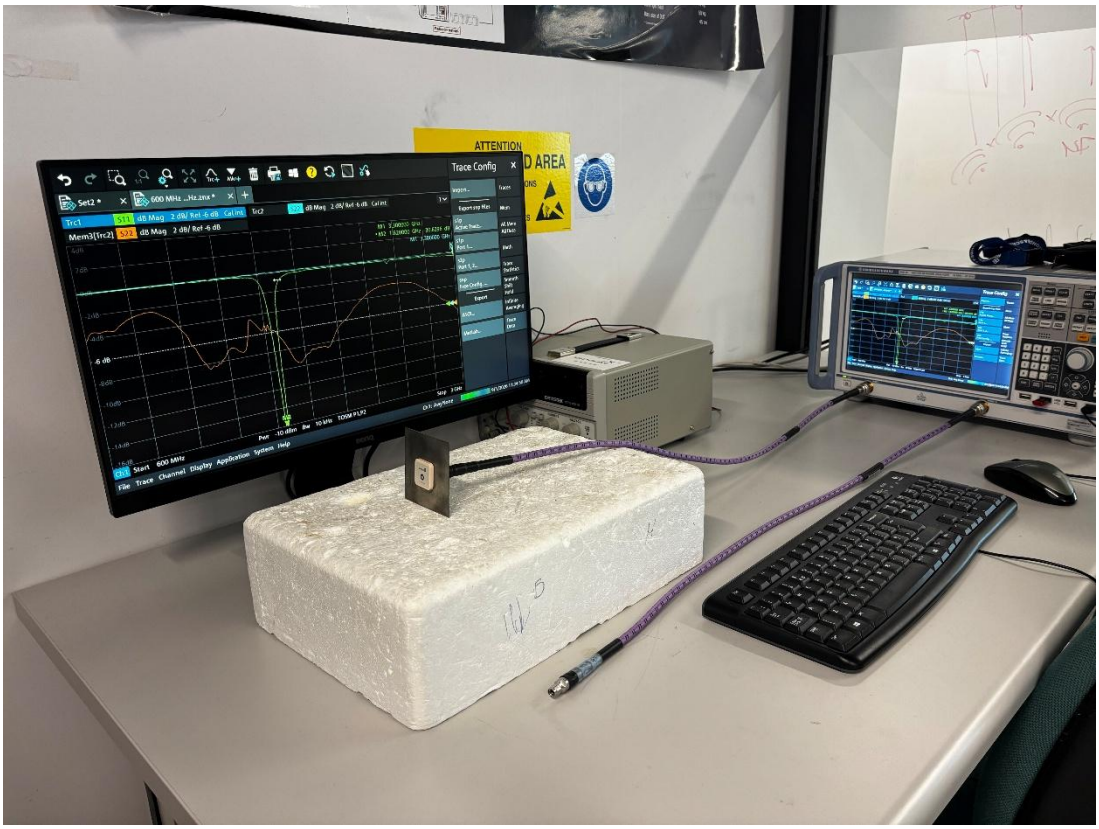

VNA Test Set-up on a 70x70mm Ground Plane

Downloaded from Arrow.com.

7.2 Return Loss

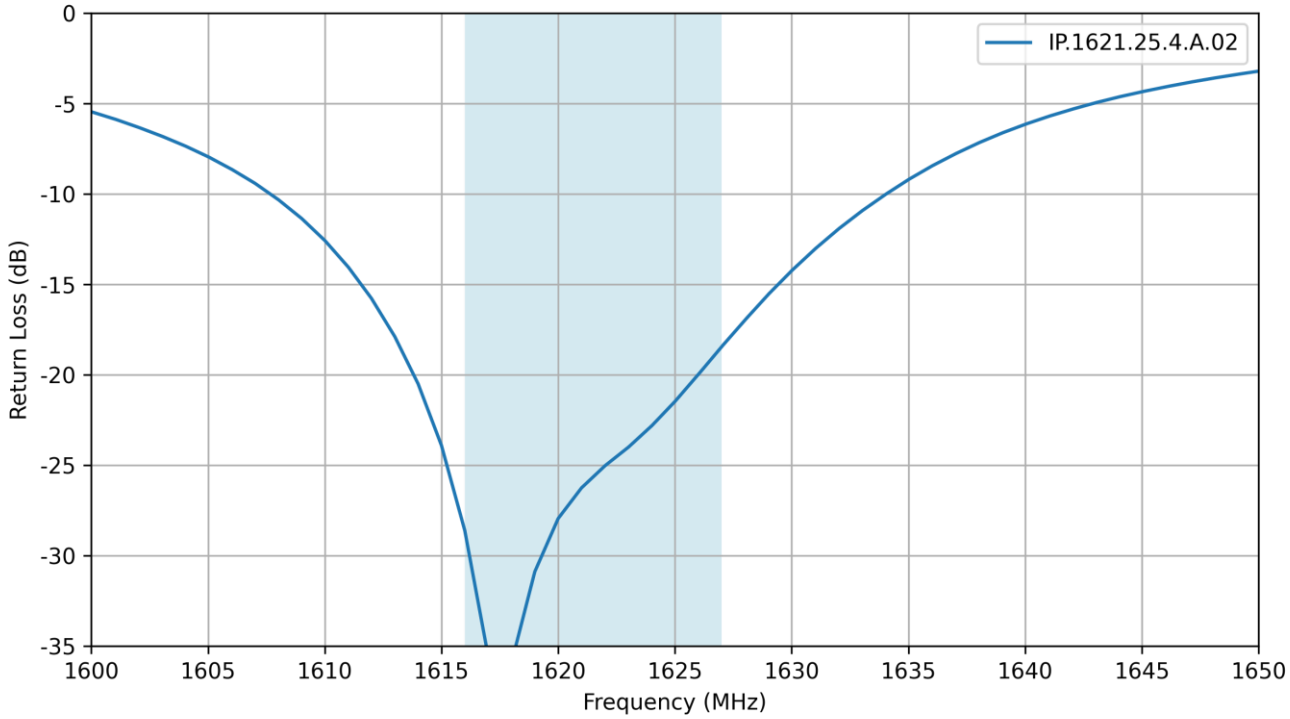

7.3 VSWR

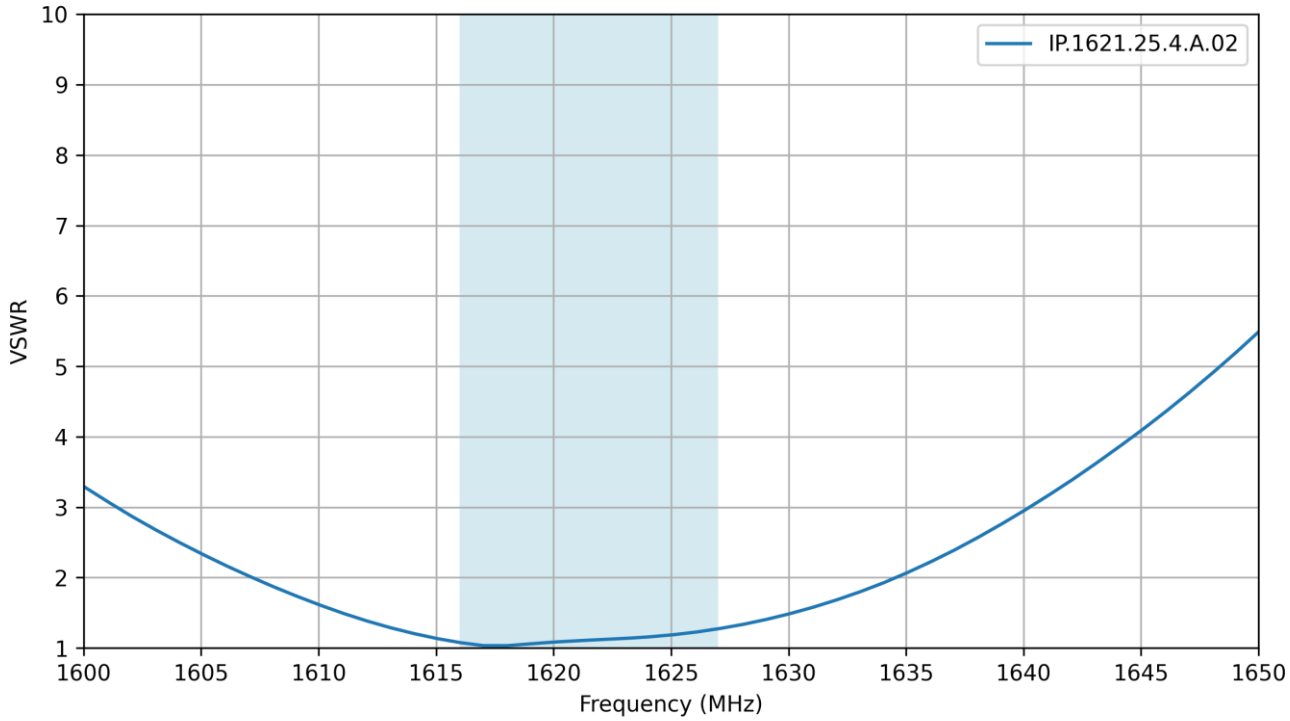

Downloaded from Arrow.com.

7.4 Efficiency

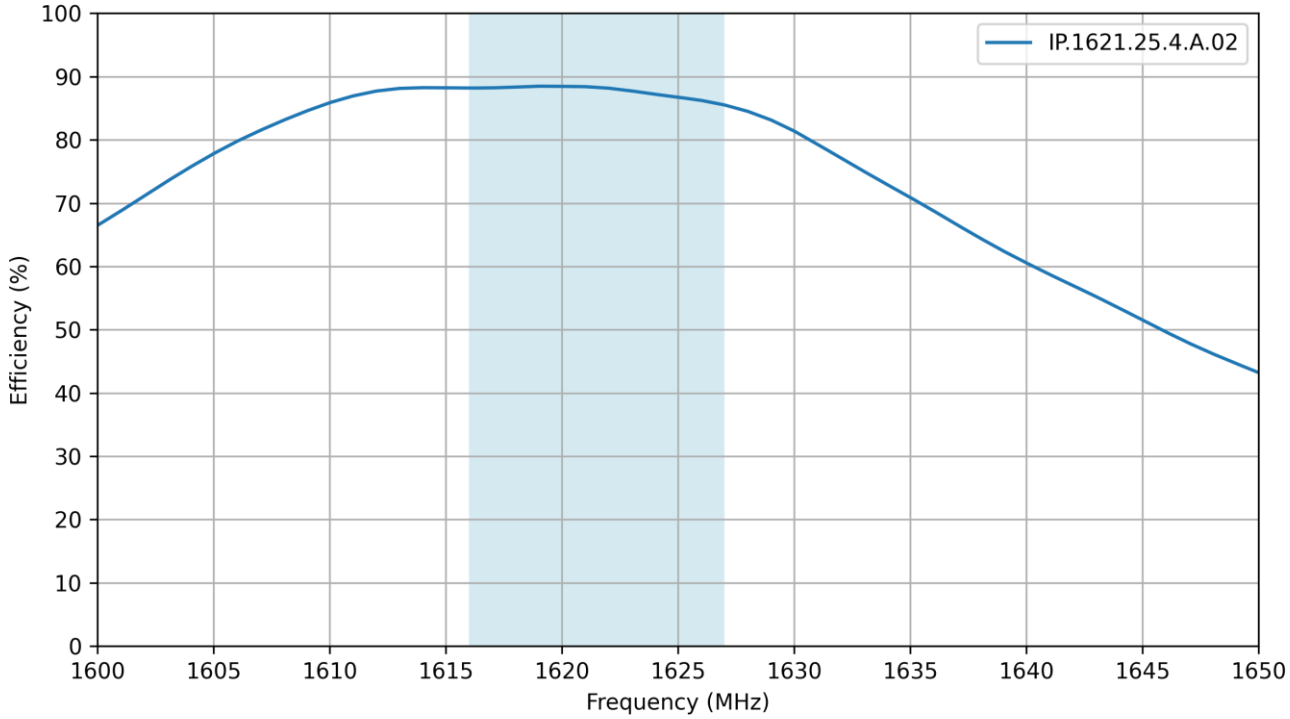

7.5 Average Gain

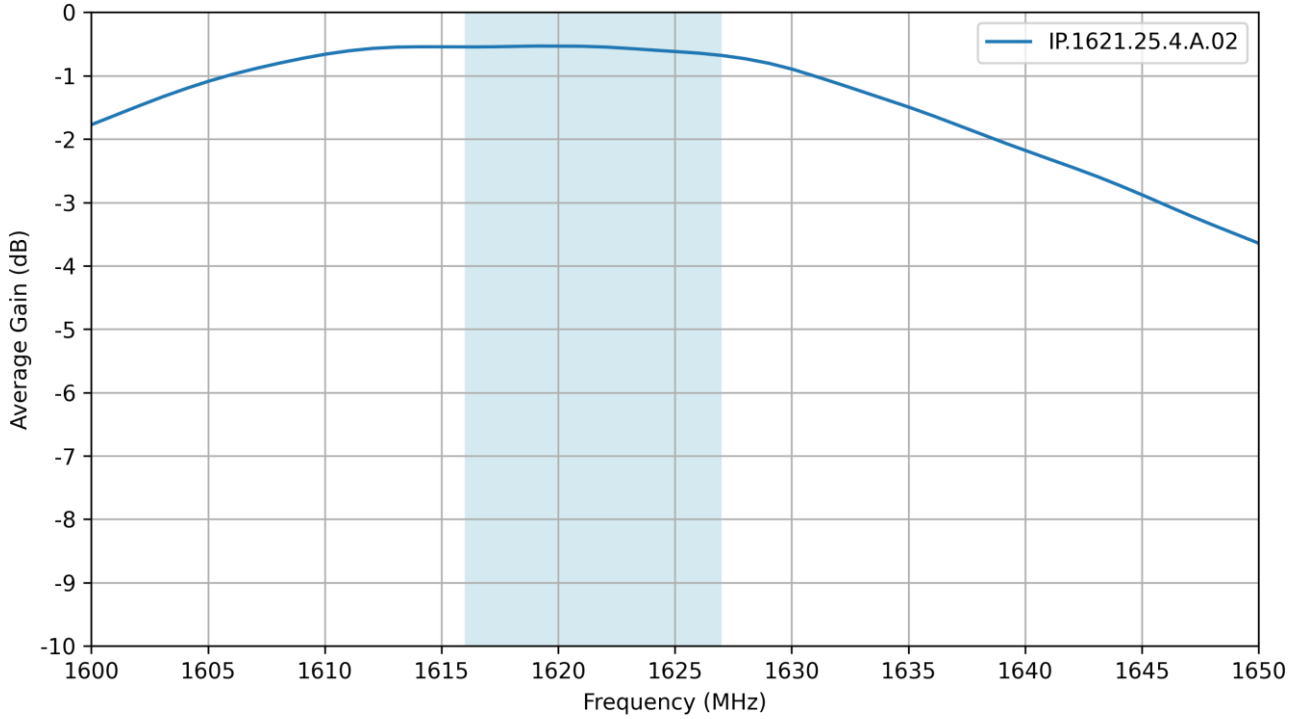

Downloaded from Arrow.com.

7.6 Peak Gain

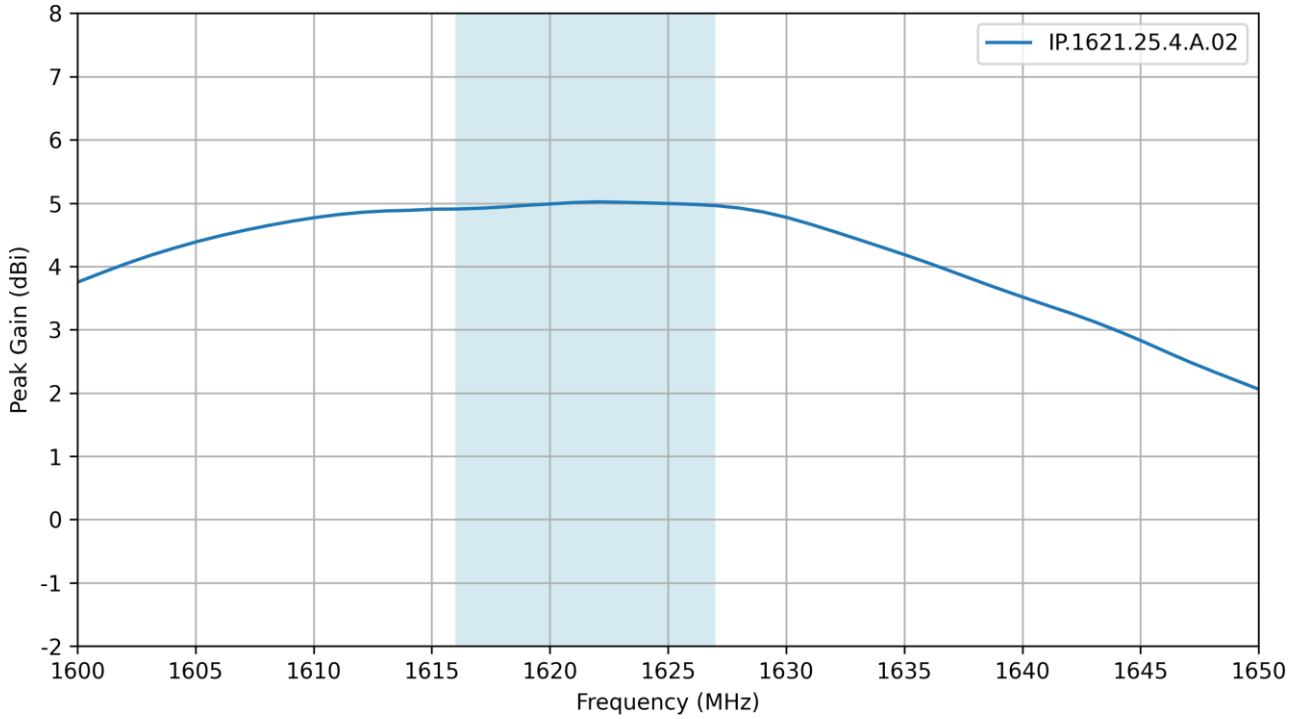

7.7 Axial Ratio

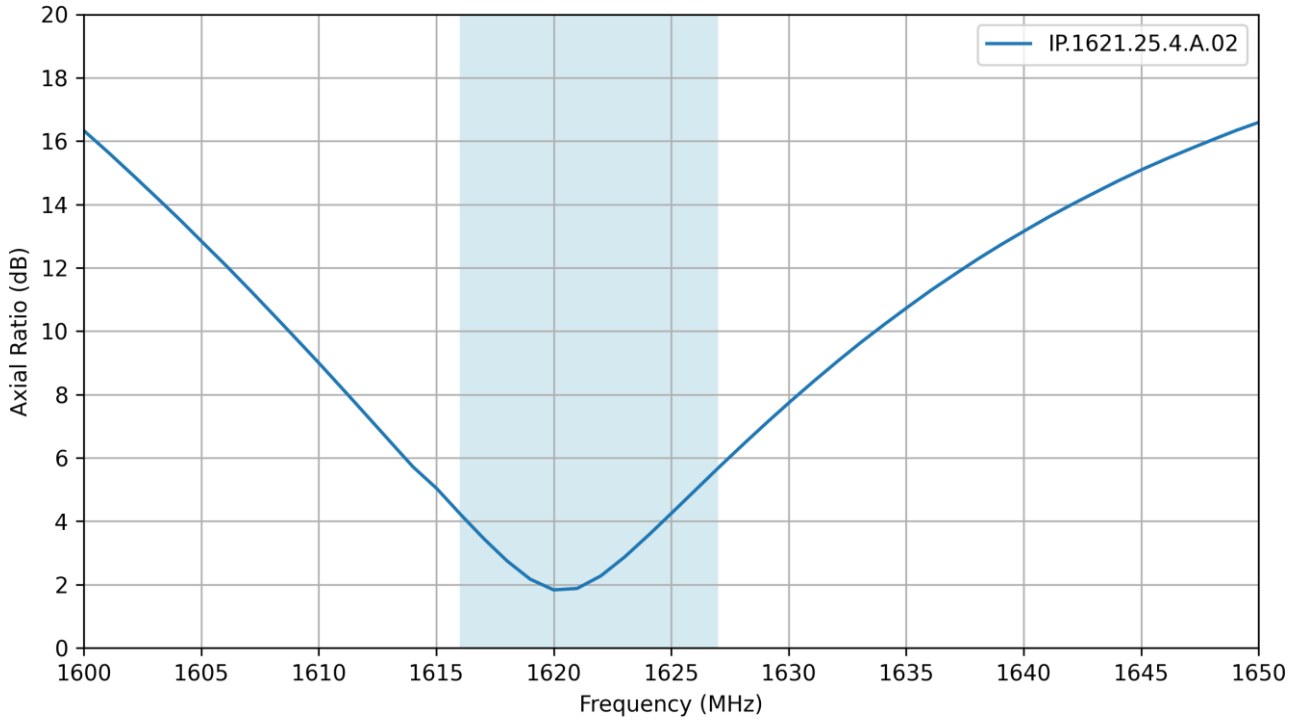

Downloaded from Arrow.com.

8. Radiation Patterns

8.1 Test Setup

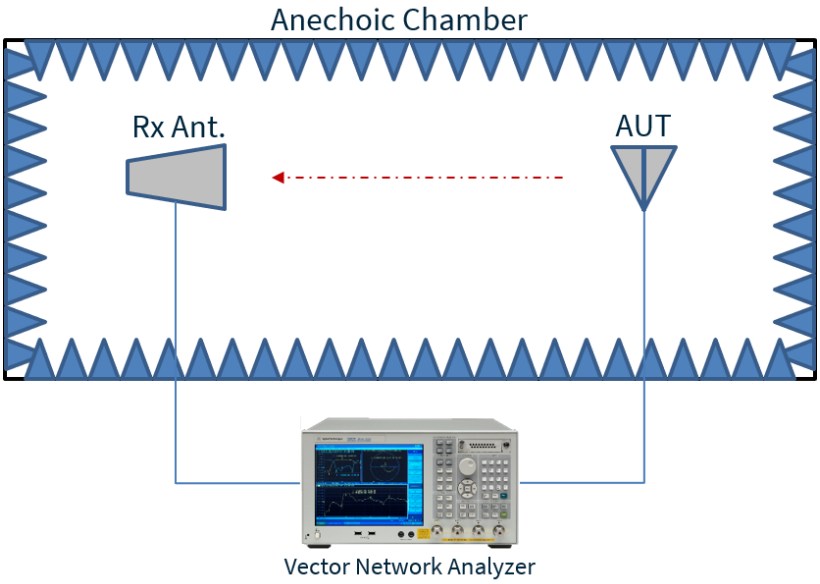

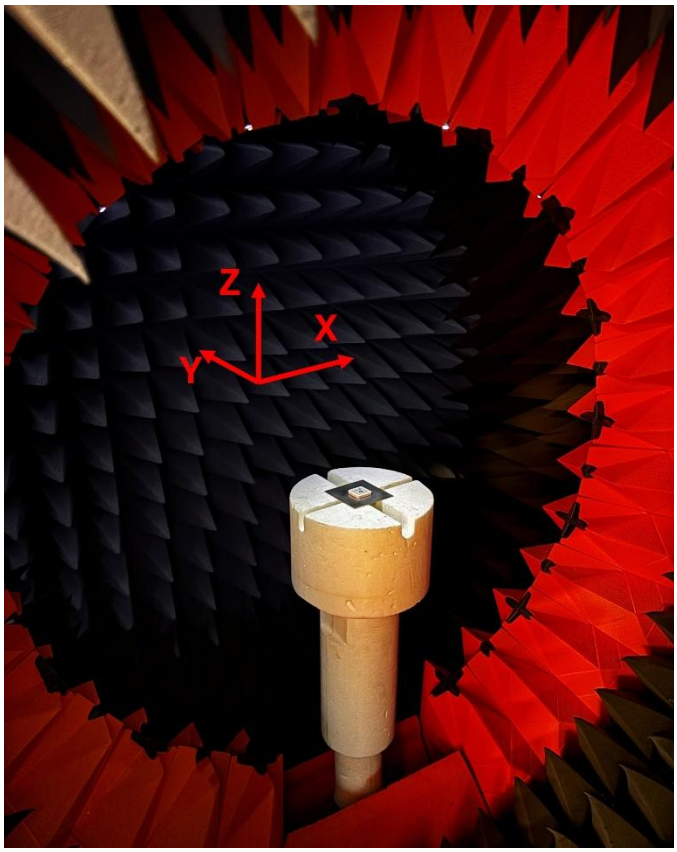

Chamber Test Set-up on a 70x70mm Ground Plane

Downloaded from Arrow.com.

8.2 Patterns at 1621 MHz

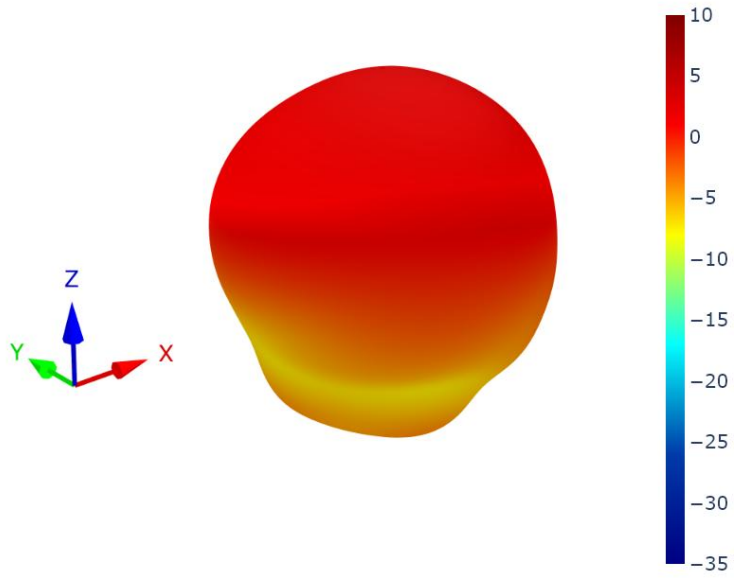

XZ Plane	YZ Plane	XY Plane
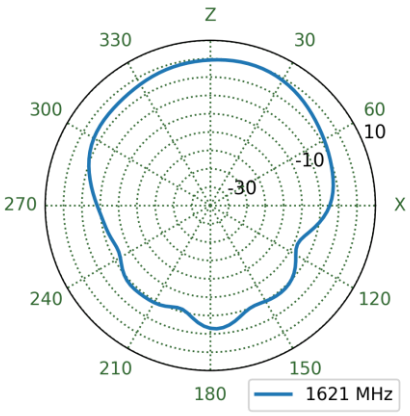	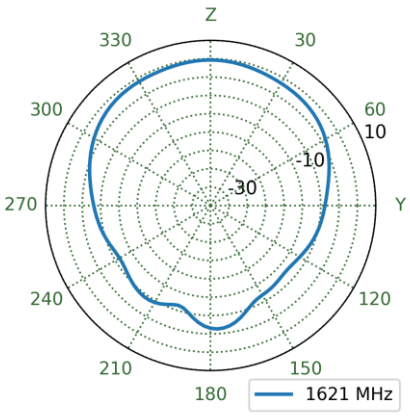	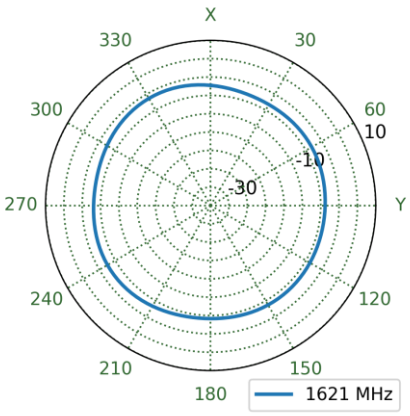

Downloaded from Arrow.com.

Changelog for the datasheet

SPE-11-8-017 – IP.1621.25.4.A.02

Revision: J (Current Version)	
Date:	2026-09-17
Changes:	Full datasheet update.
Changes Made by:	Gary West

Previous Revisions

Revision: I	
Date:	2021-06-21
Changes:	Updated Pin Length to 2.4mm Updated Drawing
Changes Made by:	Dan Cantwell

Revision: D	
Date:	2013-06-19
Changes:	Ameneded Typo on Layout Drawing
Changes Made by:	Aine Doyle

Revision: H	
Date:	2016-10-05
Changes:	Updated dimensions, and tollerances
Changes Made by:	Andy Mahoney

Revision: C	
Date:	2012-04-12
Changes:	Update
Changes Made by:	Technical Writer

Revision: G	
Date:	2016-08-18
Changes:	Updated with disclaimer and cleaned up inconsistencies.
Changes Made by:	Andy Mahoney

Revision: B	
Date:	2011-07-19
Changes:	Update
Changes Made by:	Technical Writer

Revision: F	
Date:	2015-02-16
Changes:	amended Pin Length and Packaging
Changes Made by:	Aine Doyle

Revision: A (Initial Release)	
Date:	2011-05-24
Changes:	Initial Release
Changes Made by:	Technical Writer

Revision: E	
Date:	2014-08-11
Changes:	Added EVB
Changes Made by:	Aine Doyle

Downloaded from Arrow.com.

TAOGLAS®

www.taoglas.com



Downloaded from Arrow.com.