MLX91217

High Speed Current Sensor IC

Datasheet

1. Features and Benefits

- End-of-line programmable sensor
- Selectable analog ratiometric output
- Measurement range from ±15 to ±450mT
- Wideband sensing: DC to 250kHz
- Very short response time (2µs)
- High linearity down to ±0.2% full scale
- Very low thermal drift
  - Offset drift (<5mV)
  - Sensitivity drift (<1%)
- Programmable output clamping levels
- Broken wire detection and diagnostics
- AEC-Q100 – Grade 0 automotive qualified
- RoHS compliant
- SIP4-VA package
- MSL-1

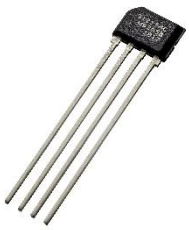

2. Application Examples

- High Voltage Traction Motor Inverter
- 48V Boost Recuperation Inverter
- DCDC Converter
- Smart Battery Junction Boxes
- Smart Fuse Overcurrent Detection

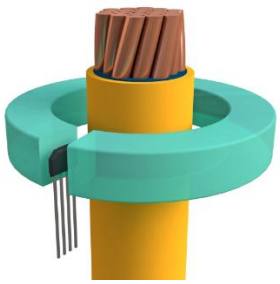

Figure 1. Typical Current Sensing Application

3. Description

The MLX91217 is a monolithic Hall-effect sensor which is sensitive to the flux density applied orthogonally to the IC surface. The sensor provides an analog output voltage proportional to the applied magnetic flux density.

The transfer characteristic of the MLX91217 is factory trimmed over temperature, and is programmable (offset, sensitivity, clamping, filtering) during end-of-line customer calibration. The output clamping levels and on-chip filtering are also programmable as a function of application needs. With the 250kHz bandwidth and fast response time, it is particularly adapted for high-speed applications such as inverters and converters where fast response time due to fast switching is required.

In a typical current sensing application, the sensor is used in combination with a ring shaped soft ferromagnetic core. This core is recommended to be laminated for high bandwidth applications. The MLX91217 is placed in a small air gap and the current conductor – a bus bar or a cable – is passed through the inner part of the ferromagnetic ring. On the one hand the ring concentrates and amplifies the magnetic flux seen by the sensor IC, and at the same time it attenuates external magnetic field disturbances.

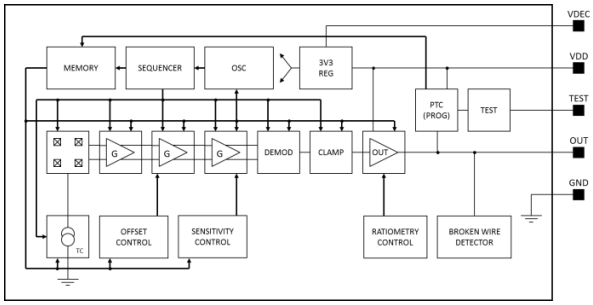

Figure 2. General Block Diagram

Downloaded from Arrow.com.

Contents

1. Features and Benefits 1
2. Application Examples 1
3. Description 1
4. Ordering Information 3
5. Functional Diagram 5
6. Glossary of Terms 5
7. Pin Definitions and Descriptions 6
8. Absolute Maximum Ratings 6
9. General Electrical Specifications 7
10. Magnetic specification 8
11. Analog output specification 8
    11.1. Accuracy specifications 8
    11.2. Timing specifications 9
12. Self-diagnostic 9
13. Programmable Parameters 10
14. Recommended Application Diagram 11
15. Standard Information 12
16. ESD Precautions 12
17. Packaging Information 13
    17.1. Sensor active measurement direction 13
    17.2. Package Marking & Hall Plate Position 13
    17.3. VA Straight leads (ACA-xxx) 14
    17.4. Trim and form type: 90° 2x2x91.3 (h=5.34mm); Bending-STD2 (ACR-xxx) 15
    17.5. Trim and form type: 90° 2x2x91.3 (h=3.7mm); Bending-STD3 (ACS-xxx) 16
    17.6. Trim and form type: 90° 2x2x91.8 (h=1.68mm); Bending-STD4 (ACT-xxx) 17
    17.7. Trim and form type: THT 2.54mm pitch (ACJ-xxx) 18
    17.8. Trim and form type: SMD style TFZT (ACY-xxx) 19
    17.9. Trim and form type: SMD style TFT4K1 (ACZ-xxx) 20
18. Disclaimer 21

Downloaded from Arrow.com.

4. Ordering Information

Product	Temperature	Package	Option Code	Polarity	Packing Form	Typical Sensitivity
MLX91217	L	VA	ACA – 000	Direct	BU/CR	10mV/mT (prog: 5..150mV/mT)
MLX91217	L	VA	ACT – 000	Direct	RE	10mV/mT (prog: 5..150mV/mT)
MLX91217	L	VA	ACJ – 000	Direct	RE	10mV/mT (prog: 5..150mV/mT)
MLX91217	L	VA	ACA – 001	Direct	BU/CR	15 mV/mT (prog: 5..150mV/mT)
MLX91217	L	VA	ACS – 001	Direct	RE	15 mV/mT (prog: 5..150mV/mT)
MLX91217	L	VA	ACZ – 001	Direct	RE	15 mV/mT (prog: 5..150mV/mT)
MLX91217	L	VA	ACA – 002[1]	Direct	BU/CR	17 mV/mT (prog: 5..150mV/mT)
MLX91217	L	VA	ACA – 003	Direct	BU/CR	9 mV/mT (prog: 5..150mV/mT)
MLX91217	L	VA	ACY – 003	Direct	RE	9 mV/mT (prog: 5..150mV/mT)
MLX91217	L	VA	ACR – 003	Direct	RE	9 mV/mT (prog: 5..150mV/mT)
MLX91217	L	VA	ACA – 004	Direct	BU/CR	7 mV/mT (prog: 5..150mV/mT)
MLX91217	L	VA	ACT – 004	Direct	RE	7 mV/mT (prog: 5..150mV/mT)
MLX91217	L	VA	ACA – 005	Direct	BU/CR	13 mV/mT (prog: 5..150mV/mT)
MLX91217	L	VA	ACT – 005	Direct	RE	13 mV/mT (prog: 5..150mV/mT)
MLX91217	L	VA	ACA – 006	Direct	BU/CR	29 mV/mT (prog: 5..150mV/mT)
MLX91217	L	VA	ACJ – 008	Inverse	RE	13 mV/mT (prog: 5..150mV/mT)
MLX91217	L	VA	ACZ – 008	Inverse	RE	13 mV/mT (prog: 5..150mV/mT)
MLX91217	L	VA	ACA – 009	Direct	BU/CR	5 mV/mT (prog: 5..150mV/mT)
MLX91217	L	VA	ACT – 009	Direct	RE	5 mV/mT (prog: 5..150mV/mT)
MLX91217	L	VA	ACT – 013	Direct	RE	12 mV/mT (prog: 5..150mV/mT)
MLX91217	L	VA	ACT – 014	Direct	RE	17.5 mV/mT (prog: 5..150mV/mT)
MLX91217	L	VA	ACA – 015	Direct	CR	23 mV/mT (prog: 5..150mV/mT)
MLX91217	L	VA	ACT – 017	Direct	RE	40 mV/mT (prog: 5..150mV/mT)

Table 1: Available ordering codes.

[1] MLX91217-LVA-ACA-002 : customized sensitivity drift, VOQ = 1V

Downloaded from Arrow.com.

Legend:

Temperature Code:	**L**	from -40°C to 150°C ambient temperature
Package Code:	**VA**	SIP4-VA package, refer to *Chapter 17* for detailed drawings
Option Code:	**ACx-000**	for factory trimmed sensitivity 10mV/mT;
	ACx-001	for factory trimmed sensitivity 15mV/mT;
	ACx-002[1]	for factory trimmed sensitivity 17mV/mT;
	ACx-003	for factory trimmed sensitivity 9mV/mT;
	ACx-004	for factory trimmed sensitivity 7mV/mT;
	ACx-005	for factory trimmed sensitivity 13mV/mT;
	ACx-006	for factory trimmed sensitivity 29mV/mT;
	ACx-008	for factory trimmed sensitivity 13mV/mT, with inverted polarity;
	ACx-009	for factory trimmed sensitivity 5mV/mT
	ACx-013	for factory trimmed sensitivity 12mV/mT
	ACx-014	for factory trimmed sensitivity 17.5mV/mT
	ACx-015	for factory trimmed sensitivity 23mV/mT
	ACx-017	for factory trimmed sensitivity 40mV/mT
	ACA-xxx	default straight leads *(see chapter 17)*
	ACR-xxx	for Trim and Form shape: 90° 2x2x91.3 (h=5.34mm) Bending-STD2 *(see chapter 17)*
	ACS-xxx	for Trim and Form shape: 90° 2x2x91.3 (h=3.7mm) Bending-STD3 *(see chapter 17)*
	ACT-xxx	for Trim and Form shape: 90° 2x2x91.8 (h=1.68mm) Bending-STD4 *(see chapter 17)*
	ACJ-xxx	for Trim and Form shape: THT 2.54mm pitch *(see chapter 17)*
	ACY-xxx	for Trim and Form shape: SMD style TFZT *(see chapter 17)*
	ACZ-xxx	for Trim and Form shape: SMD style TFT4K1 *(see chapter 17)*
Packing Form:	**BU**	for Bulk,
	CR	for Carton Reel - Radial taping – available for straight leads only
	CA	for Carton Reel – Ammopack – available for straight leads only
	RE	for Plastic Reel – available for selected Trim & Form options only
Ordering Example:	"**MLX91217LVA-ACA-005-CR**" MLX91217 Conventional Hall current sensor in SIP4 VA package, temperature range -40°C to 150°C. Sensitivity 13mV/mT. Parts delivered in Carton Reel (Radial Taping)	

Melexis is continuously expanding its portfolio to serve our customer's needs. Please contact your local sales representative in case your desired ordering code is not part of the above table.

Downloaded from Arrow.com.

5. Functional Diagram

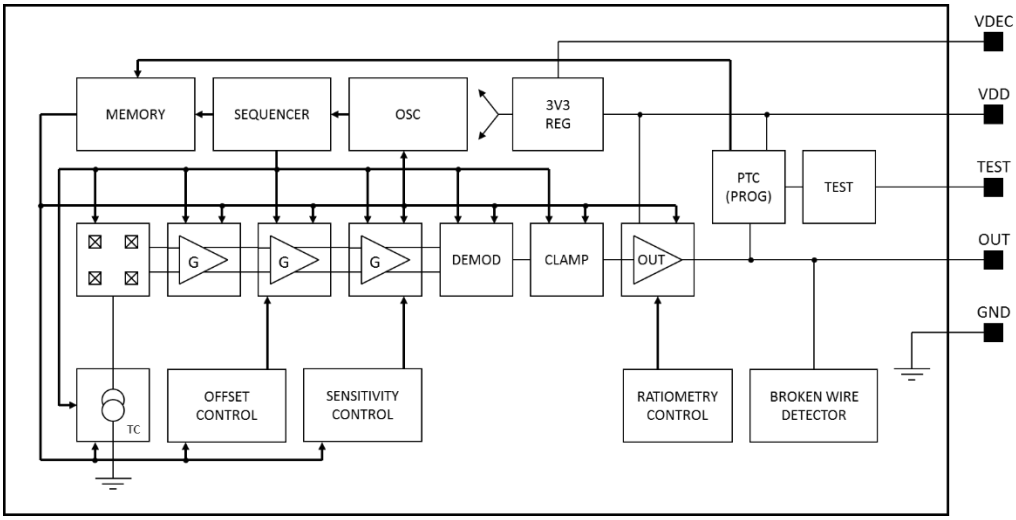

Figure 3: Block Diagram of the MLX91217:

6. Glossary of Terms

Terms	Definition
TC	Temperature Coefficient
FS	Full Scale, output referred. Corresponds to 2V excursion around 2.5V VOQ point
T, mT	Tesla, milliTesla = units for the magnetic flux density
G	Gauss = unit for the magnetic flux density [1mT = 10G]
PTC	Programming Through Connector
IMC	Integrated Magnetic Concentrator (IMC-Hall®)
FS	Full scale. If FS=2000mV, 0.4%FS = 8mV

Table 2: Glossary of Terms

Downloaded from Arrow.com.

7. Pin Definitions and Descriptions

Note: MLX91217 is pin-to-pin compatible with MLX91209.

Pin #	Name	Type	Description
1	VDD	Supply	Supply Voltage
2	OUT	Analog	Current Sensor Output
3	TEST	Digital	Test and Factory Calibration
4	GND	Ground	Supply Voltage

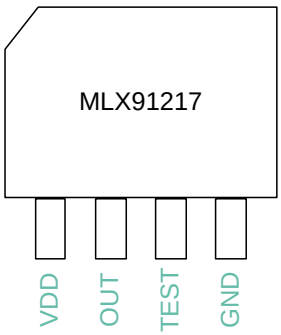

Table 3: Pin definitions and descriptions

For optimal EMC results, it is recommended to connect the TEST pin to the Ground (see section 13).

8. Absolute Maximum Ratings

Parameter	Symbol	Value	Unit
Positive Supply Voltage (overvoltage)	V_{DD}	+10	V
Reverse Voltage Protection	VS_{REV}	-0.3	V
Positive Output Voltage	V_{OUT}	+10	V
Output Current	I_{OUT}	±70	mA
Reverse Output Voltage	VO_{REV}	-0.3	V
Reverse Output Current	IO_{REV}	-50	mA
Operating Ambient Temperature Range	T_A	-40 to +150	°C
Maximum Junction Temperature	$T_{j,max}$	-55 to +155	°C
Package Thermal Resistance *(junction-to-ambient) θ_{ja} is defined according JEDEC 1s0p board*	θ_{ja}	205	°C/W
Storage Temperature Range	T_S	-55 to +165	°C
Magnetic Flux Density	B_{MAX}	±3	T
ESD – Human Body Model	ESD_{HBM}	2	kV

Table 4: Absolute maximum ratings

Exceeding the absolute maximum ratings may cause permanent damage. Exposure to absolute maximum-rated conditions for extended periods of time may affect device reliability.

Downloaded from Arrow.com.

9. General Electrical Specifications

Operating Parameters T_A = -40 to 150°C, V_{DD} = 5V±10%, unless otherwise specified.

Parameter	Symbol	Test Conditions	Min.	Typ.	Max.	Units
Nominal Supply Voltage	V_{DD}		4.5	5	5.5	V
Supply	I_{DD}	No R_{load} LOW_POWER_MODE=0[2] LOW_POWER_MODE=1		 12.5 10	 15 13	 mA mA
Output Impedance	R_{OUT}	Vout = 50% Vdd		1	5	Ω
Output Capacitive Load	C_L	OUT_MODE=0 OUT_MODE=1	1 10		10 47	nF nF
Output Resistive Load	R_{Load}	Output resistive load for high linearity and diagnostic band.	10	25	200	kΩ
Output Short Circuit Current	I_{SHORT}	Output shorted permanent to VDD. Output shorted permanent to GND.		Not Destroyed Not Destroyed		
Linear Output Range	VO_{LIN}	pull-down ≥ 10 kΩ	10		90	%Vdd
Diagnostic Band[3]	DIAG	R_L ≥ 10kΩ, R_L ≤ 200 kΩ, V_{DD} =5V DIAG_LEVEL = 0 DIAG_LEVEL = 1	 0 96		 4 100	 %Vdd %Vdd
BrokenGND Output Level[3]		R_L ≥ 10kΩ, V_{DD} = 5V	96		100	%Vdd
BrokenVDD Output Level[3]		R_L ≥ 10kΩ, V_{DD} = 5V	0		4	%Vdd
Under-voltage detection[3]	V_{DD_UVD}	Detected Voltage (Low to High)	4.0		4.5	V
	V_{DD_UVH}	Hysteresis	0.01		0.2	V
Over-voltage detection 1[3]	V_{DD_OVD1}	Detected Voltage (Low to High)	6.7		7.4	V
	V_{DD_OVH1}	Hysteresis	0.37		0.66	V
Over-voltage detection 2[3]	V_{DD_OVD2}	Detected Voltage (Low to High)	8.3		9.5	V
	V_{DD_OVH2}	Hysteresis	0.2		0.8	V
Clamped Output Level	Clamp_lo0	CLAMP_LEVEL=0	5	6	7	%Vdd
	Clamp_hi0	CLAMP_LEVEL=0	92	93	94	%Vdd
	Clamp_lo1	CLAMP_LEVEL=1	5	6	7	%Vdd
	Clamp_hi1	CLAMP_LEVEL=1	93	94	95	%Vdd
	Clamp_lo2	CLAMP_LEVEL=2	7	8	9	%Vdd
	Clamp_hi2	CLAMP_LEVEL=2	91	92	93	%Vdd
	Clamp_lo3	CLAMP_LEVEL=3	9	10	11	%Vdd
	Clamp_hi3	CLAMP_LEVEL=3	89	90	91	%Vdd

Table 5: General electrical parameters

[2] *Default Factory Calibration*

[3] *Please refer to section 12 for more information on self-diagnostic modes.*

Downloaded from Arrow.com.

10. Magnetic specification

Operating Parameters T_A = -40 to 150°C, V_{DD} = 5V±10%, unless otherwise specified.

Parameter	Symbol	Test Conditions	Min	Typ	Max	Units
Operational Magnetic Field Range	B_{OP}		±15	±130	±450	mT
Linearity Error	NL	V_{OUT} in [10%V_{DD}, 90%V_{DD}], T_A = 25°C LOW_POWER_MODE=0 LOW_POWER_MODE=1			 ±0.4 ±0.2	 %FS %FS
Programmable Sensitivity[4]	S		5	15	150	mV/mT
Sensitivity programming Resolution	S_{RES}	B = B_{OP}		0.1		%

Table 6: Magnetic specification

11. Analog output specification

11.1. Accuracy specifications

Operating Parameters T_A = -40 to 150°C, V_{DD} = 5V±10%, unless otherwise specified.

Parameter	Symbol	Test Conditions	Min	Typ	Max	Units
Thermal Offset Drift	$\Delta^T V_{OQ}$	T_A = -40 to 125°C T_A = -40 to 150°C			±5 ±8	mV mV
Thermal Sensitivity Drift[5]	$\Delta^T S$	T_A = -40 to 125°C T_A = -40 to 150°C			±1.0 ±1.2	%S %S
RMS Output Noise	N_{RMS}	Values for 50mV/mT sensitivity Scales with typical sensitivity of Table 1 NOISE_FILTER=0 NOISE_FILTER=1 NOISE_FILTER=2 NOISE_FILTER=3		 10 7 5 3		 mV_{RMS} mV_{RMS} mV_{RMS} mV_{RMS}
V_{OQ} Ratiometry	$\Delta^R V_{OQ}$	V_{DD} = 5V±5%, (for all option codes) V_{OQ} = 20%V_{DD} MLX91217LVA-ACA-002) V_{OQ} = 50%V_{DD} – (all other option codes)			 ±0.4 ±0.4	 %V_{OQ} %V_{OQ}
Sensitivity Ratiometry	$\Delta^R S$	V_{DD} = 5V±5%, B = B_{OP}			±0.4	%S
Clamped output accuracy	CL_{ACC}				±1	%Vdd

Table 7: Accuracy specifications – analog parameters

[4] Changing the sensitivity more than +/-200% versus factory programmed sensitivity may cause an increase of the thermal offset drift.

[5] Except MLX91217-LVA-ACA-002

Downloaded from Arrow.com.

The accuracy specifications are defined for the factory calibrated sensitivity. The achievable accuracy is dependent on the user's end-of-line calibration. Resolution for offset and offset drift calibration is better than 0.02%V_{DD}. Trimming capability is higher than measurement accuracy. End-user calibration can therefore increase the accuracy of the system.

11.2. Timing specifications

Operating Parameters T_A = -40 to 150°C, Vdd = 5V±10%, unless otherwise specified.

Parameter	Symbol	Test Conditions	Min	Typ	Max	Units
Refresh rate	Trr		0.8	1	2	µs
Step Response Time	T_R	C_L=10nF				
		NOISE_FILTER=0, LOW_POWER_MODE=0		2	3	µs
		NOISE_FILTER=0, LOW_POWER_MODE=1		3	4	µs
		NOISE_FILTER=1, LOW_POWER_MODE=0		3	4	µs
		NOISE_FILTER=1, LOW_POWER_MODE=1		5	6	µs
		NOISE_FILTER=2, LOW_POWER_MODE=0		4	5	µs
		NOISE_FILTER=2, LOW_POWER_MODE=1		6	7	µs
		NOISE_FILTER=3, LOW_POWER_MODE=0		8	9	µs
		NOISE_FILTER=3, LOW_POWER_MODE=1		10	11	µs
Power on Delay	T_{POD}	Vout =100% of F.S.			1	ms
Ratiometry Cut-off Frequency	F_{RAT}			250		Hz

Table 8: Timing specifications of the high-speed analog output

12. Self-diagnostic

MLX91217 provides several self-diagnostic features, which prevent the IC from providing erroneous output signal in case of internal or external failure modes.

Error	Effect on Output	Remarks
Calibration data CRC Error	DIAG_LEVEL=0 → active pull-down to GND DIAG_LEVEL=1 → active pull-up to VDD	at power up and in normal mode
Power-On Delay	Pull-down to GND	1ms max followed by settling
Over-voltage Mode 1	Active pull-down to GND	
Over-voltage Mode 2	DIAG_LEVEL=0 → active pull-down to GND DIAG_LEVEL=1 → active pull-up to VDD	
Under-voltage Mode	DIAG_LEVEL=0 → active pull-down to GND DIAG_LEVEL=1 → active pull-up to VDD	Valid with enabled ratiometry (Default: RATIOEN = 1)
Broken OUT	Active pull-down to GND	
Broken GND	Output pulled up to VDD	IC is switched off
Broken VDD	Output pulled down to GND	IC is switched off

Table 9: Description of the self-diagnostic modes in MLX91217

Downloaded from Arrow.com.

13. Programmable Parameters

Customers can re-program the parameters described in the table below by using the PTC-04 hardware and the Product Specific Functions (PSF) libraries provided by Melexis. We recommend using the latest version of the PSF and the firmware, with a communication speed of 10kbps (maximum output capacitor of 47nF). Please contact your sales representative to get access to Melexis SoftDist platform and download the latest software.

Parameter	Bits	Factory Setting	Function
ROUGHGAIN	3	Trimmed	Rough gain trimming
FINEGAIN	10	Trimmed	Fine gain trimming
VOQ	12	Trimmed	Offset trimming
OUT_MODE	1	0	0: low capacitive load (see section 14) 1: high capacitive load (see section 14)
DIAG_LEVEL	1	0	0: in diagnostic, output is pulled down to GND 1: in diagnostic, output is pulled up to Vdd
LOW_POWER_MODE	1	0	0: normal mode 1: low power mode with slower response time. **Not recommended with RG=0**
CLAMP_LEVEL	2	1	Select clamping level (%VDD) 0: 6%/93%, 1: 6%/94%, 2: 8%/92%, 3: 10%/90%
NOISE FILTER	2	0/1[6]	0: Noise filter: deactivated 1: Noise filter: 120kHz 2: Noise filter: 60kHz 3: Noise filter: 15kHz
CSTID	17	N/A	Customer ID

Table 10: Default settings

Downloaded from Arrow.com.

14. Recommended Application Diagram

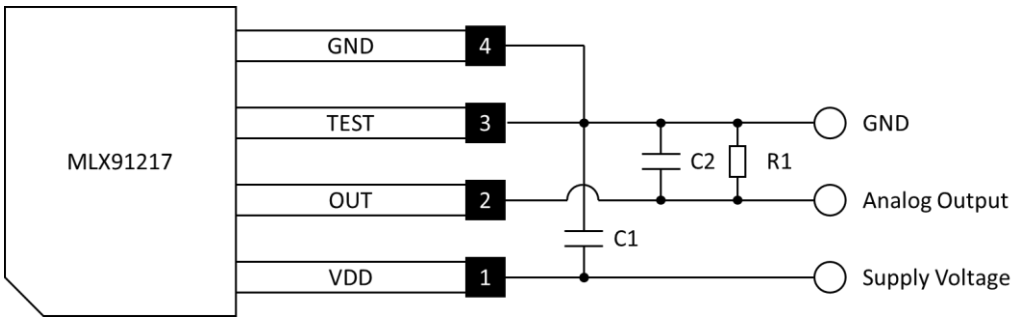

Figure 4: Application Diagram with external Pull-Down resistance

Part	Description	Value	Unit
C1	Supply capacitor, EMI, ESD	100	nF
C2	Decoupling, EMI, ESD, OUT_MODE=0	1-10	nF
	Decoupling, EMI, ESD, OUT_MODE=1	8-47	nF
R1	Pull down resistor	10-200	kΩ

Table 11: Resistor and capacitor values

Downloaded from Arrow.com.

15. Standard Information

Our products are classified and qualified regarding soldering technology, solderability and moisture sensitivity level according to standards in place in Semiconductor industry.

Reflow Soldering SMD's (Surface Mount Devices)

- IPC/JEDEC J-STD-020
  Moisture/Reflow Sensitivity Classification for Nonhermetic Solid State Surface Mount Devices
  (classification reflow profiles according to table 5-2)
- EIA/JEDEC JESD22-A113
  Preconditioning of Nonhermetic Surface Mount Devices Prior to Reliability Testing
  (reflow profiles according to table 2)

Wave Soldering SMD's (Surface Mount Devices) and THD's (Through Hole Devices)

- EN60749-20
  Resistance of plastic- encapsulated SMD's to combined effect of moisture and soldering heat
- EIA/JEDEC JESD22-B106 and EN60749-15
  Resistance to soldering temperature for through-hole mounted devices

Iron Soldering THD's (Through Hole Devices)

- EN60749-15
  Resistance to soldering temperature for through-hole mounted devices

Solderability SMD's (Surface Mount Devices) and THD's (Through Hole Devices)

- EIA/JEDEC JESD22-B102 and EN60749-21
  Solderability

For further details about test method references and for compliance verification of selected soldering method for product integration, Melexis recommends reviewing on our web site the General Guidelines soldering recommendation. For all soldering technologies deviating from the one mentioned in above document (regarding peak temperature, temperature gradient, temperature profile etc), additional classification and qualification tests have to be agreed upon with Melexis.

For package technology embedding trim and form post-delivery capability, Melexis recommends to consult the dedicated trim&form recommendation application note: lead trimming and forming recommendations.

Melexis is contributing to global environmental conservation by promoting **lead free** solutions. For more information on qualifications of **RoHS** compliant products (RoHS = European directive on the Restriction Of the use of certain Hazardous Substances) please visit the quality page on our website: http://www.melexis.com/en/quality-environment

16. ESD Precautions

Electronic semiconductor products are sensitive to Electro Static Discharge (ESD).
Always observe Electro Static Discharge control procedures whenever handling semiconductor products.

Downloaded from Arrow.com.

17. Packaging Information

Tolerances are not guaranteed when parts are delivered in bulk form (ESD bag).

17.1. Sensor active measurement direction

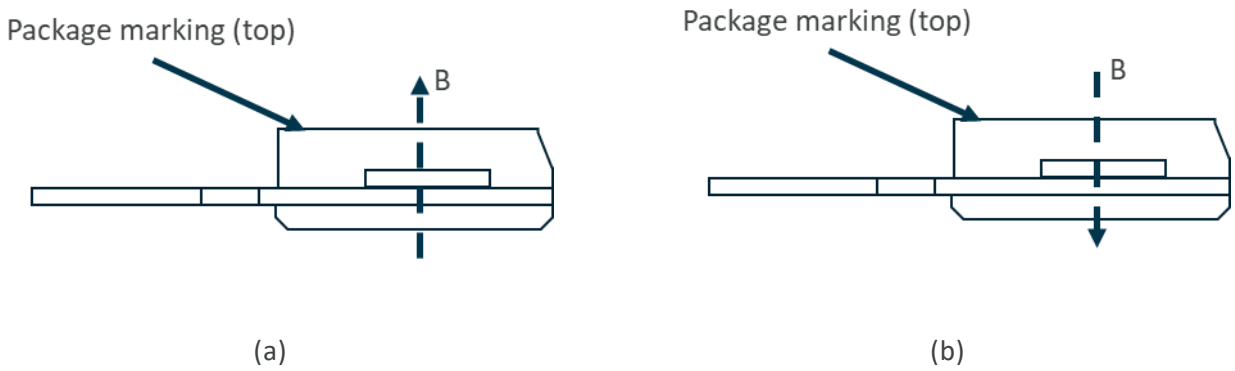

Figure 5. VA/SIP 4L Package, with sensor's active measurement direction in (a) direct and (b) inverse polarity configurations.

17.2. Package Marking & Hall Plate Position

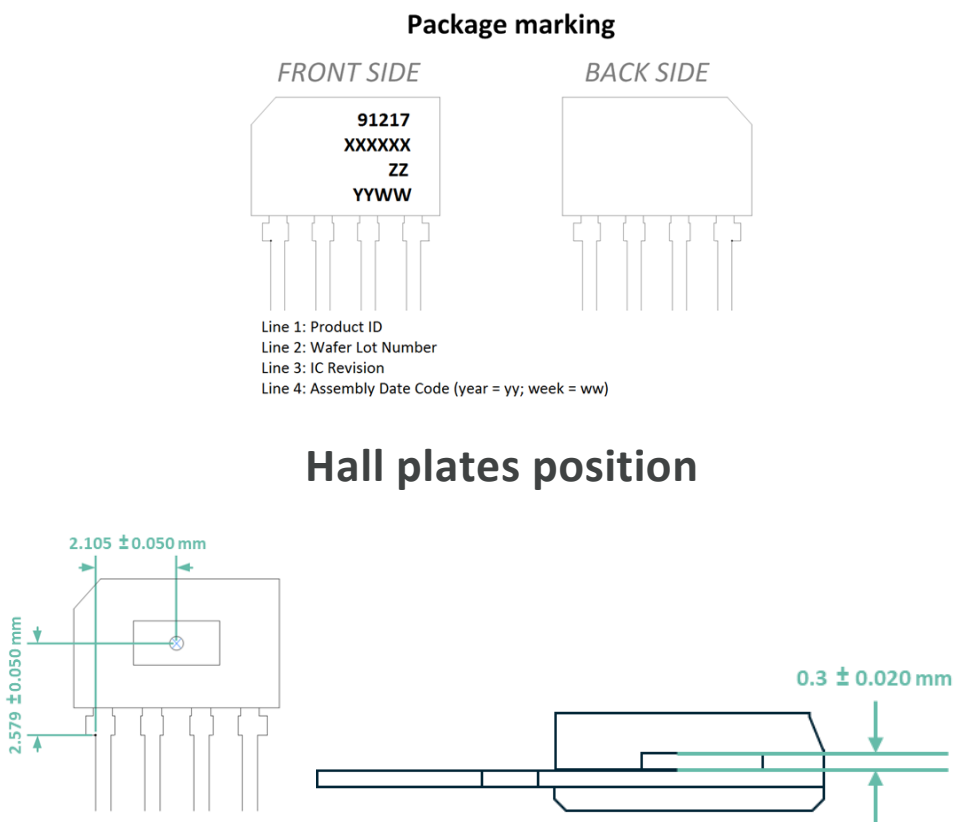

Figure 6. VA/SIP 4L (single in-line package) / 18mm lead length - Package Information and Hall plates position.

Downloaded from Arrow.com.

17.3. VA Straight leads (ACA-xxx)

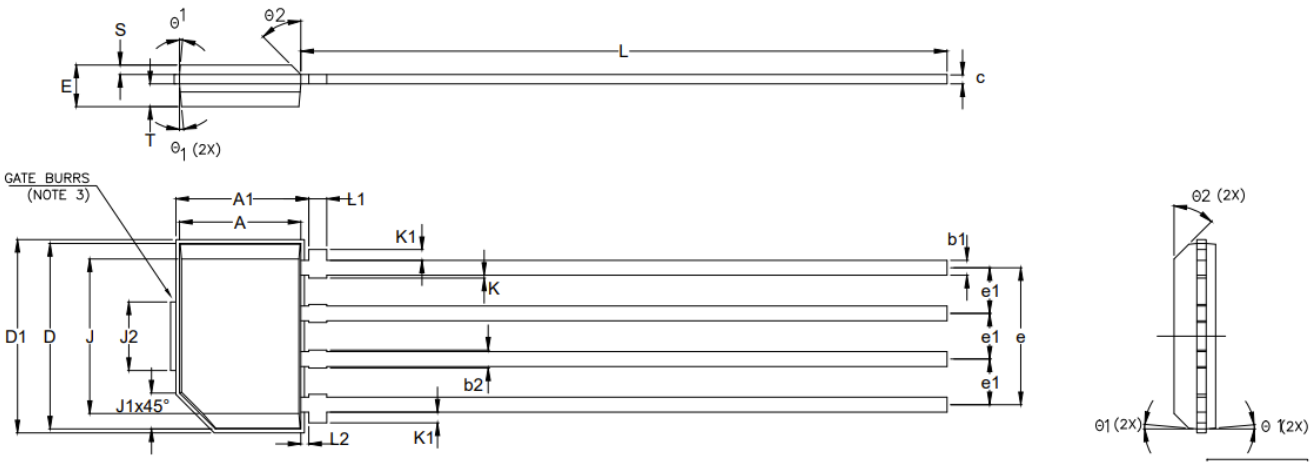

Note:
1. DIMENSIONS "A" AND "D" DO NOT INCLUDE MOLD FLASH, PROTRUSIONS AND GATE BURRS.
2. DIMENSIONS "A1" DOES NOT INCLUDE GATE BURRS BUT INCLUDES MOLD FLASH AT BOTH ENDS.
3. MOLD GATE BURRS SHALL NOT EXCEED 0.15 mm MEASURED FROM EDGE OF MOLD FLASH (FLANGE).
4. DIMENSION "D1" INCLUDES MOLD FLASH AT BOTH ENDS.
5. LEAD PLATING; MATTE TIN PLATING THICKNESS 7.62 – 15.42 um.

SYMBOLS	DIMENSIONS IN MILLIMETERS		
	MIN	NOM	MAX
A	3.30	3.38	3.46
A1	3.62	3.70	3.78
D	5.08	5.16	5.24
D1	5.33	5.38	5.43
E	1.10	---	1.20
J	4.10	4.30	4.50
J1	1.00 REF		
J2	1.906 REF		
K	0.00	---	0.15
K1	0.25	0.30	0.35
L	17.5	18.0	18.5
L1	0.45	0.50	0.55
L2	0.22 REF		
S	0.24	---	0.29
T	0.61	---	0.66
b1	0.35	---	0.48
b2	0.40	---	0.60
c	0.18	---	0.34
e	3.745	3.81	3.875
e1	1.205	1.27	1.335
θ1	5° REF		
θ2	45° REF		

Downloaded from Arrow.com.

17.4. Trim and form type: 90° 2x2x91.3 (h=5.34mm); Bending-STD2 (ACR-xxx)

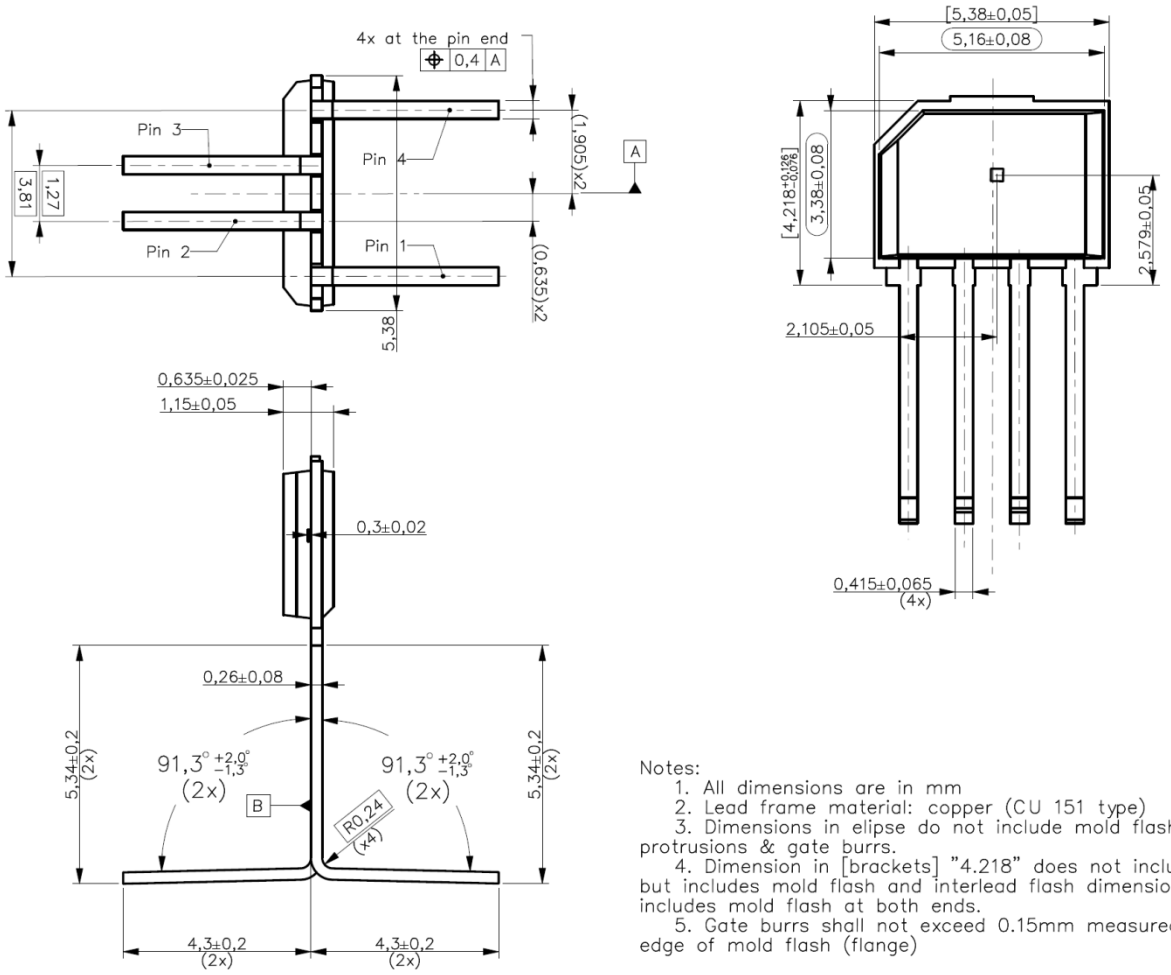

Notes:
1. All dimensions are in mm
2. Lead frame material: copper (CU 151 type)
3. Dimensions in elipse do not include mold flash protrusions & gate burrs.
4. Dimension in [brackets] "4.218" does not include gate burrs, but includes mold flash and interlead flash dimension "5.38" includes mold flash at both ends.
5. Gate burrs shall not exceed 0.15mm measured from edge of mold flash (flange)

Downloaded from Arrow.com.

17.5. Trim and form type: 90° 2x2x91.3 (h=3.7mm); Bending-STD3 (ACS-xxx)

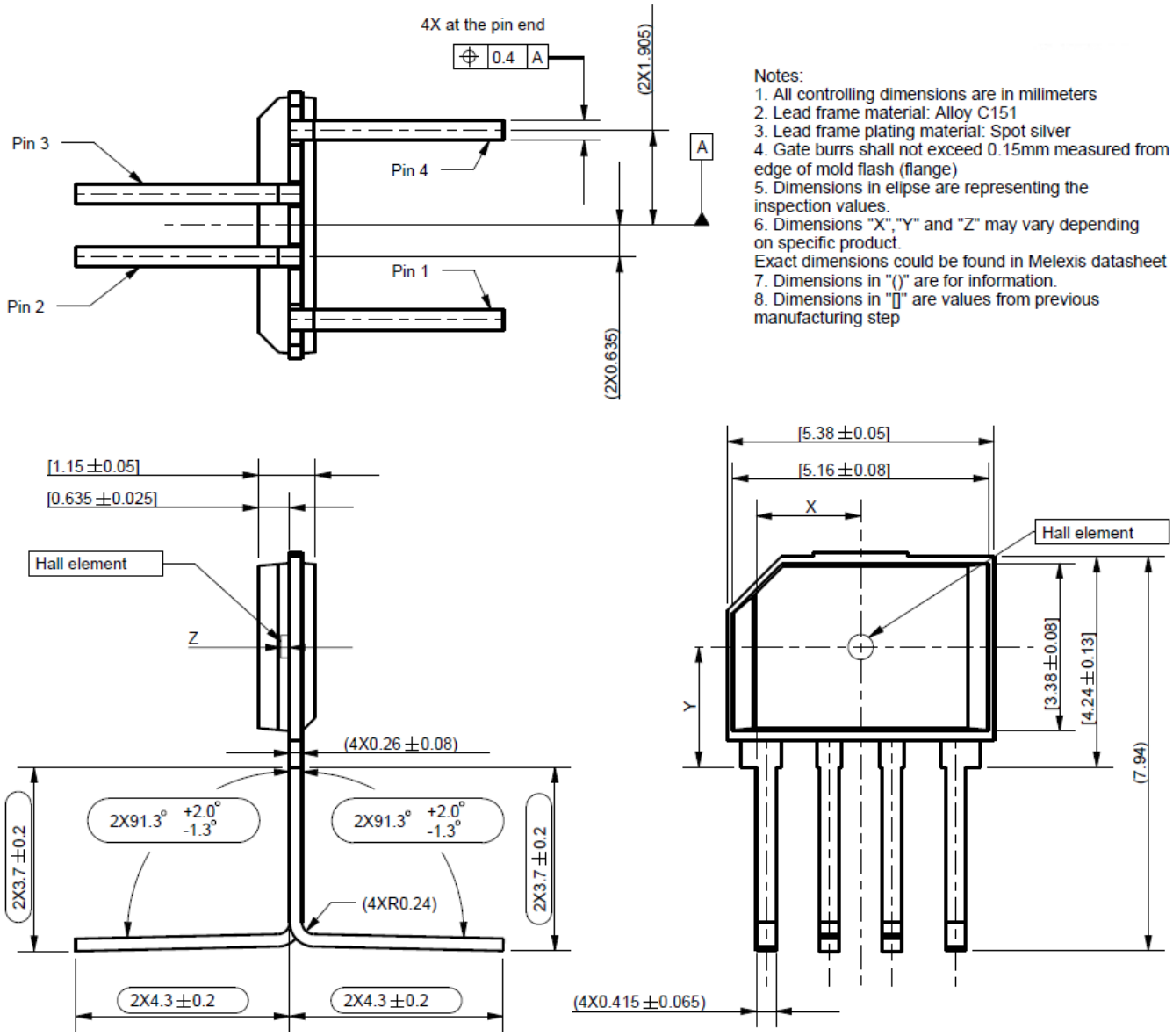

Downloaded from Arrow.com.

17.6. Trim and form type: 90° 2x2x91.8 (h=1.68mm); Bending-STD4 (ACT-xxx)

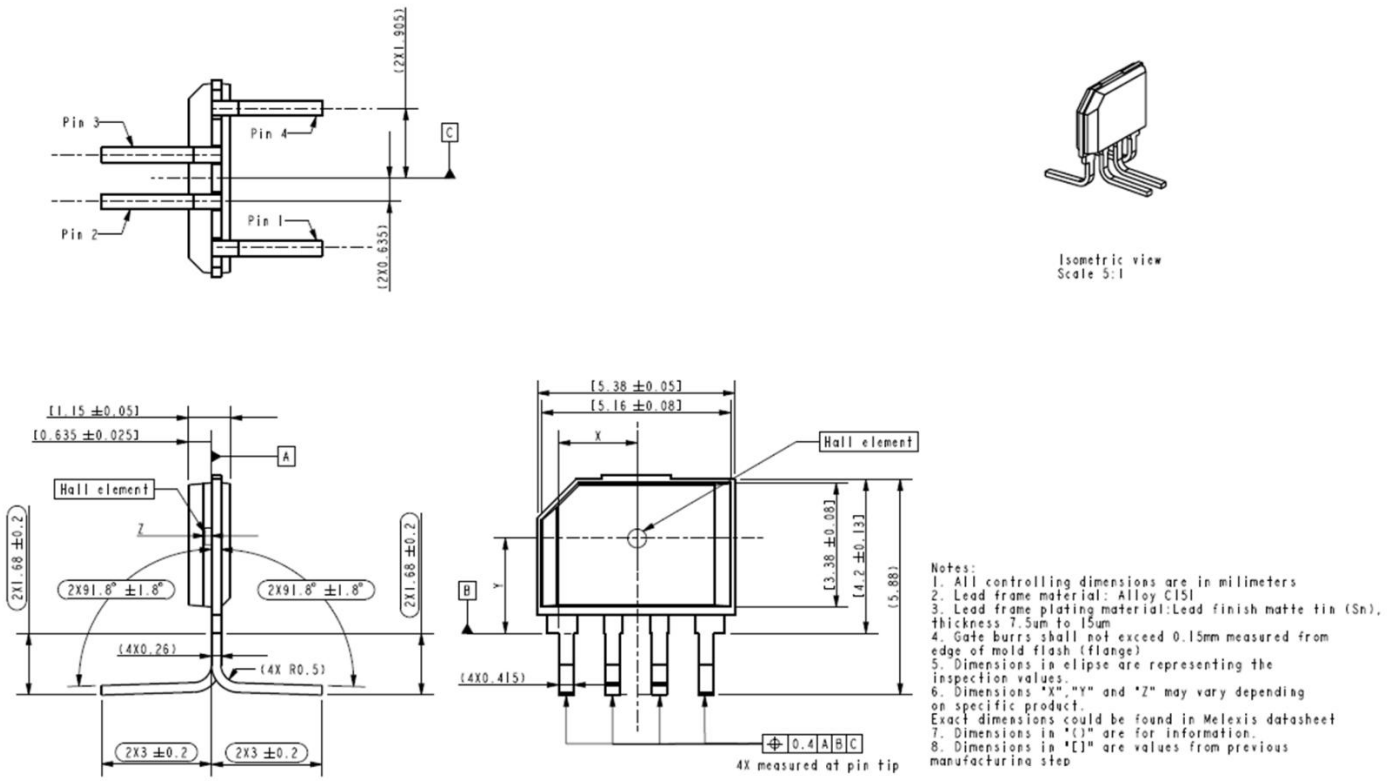

Downloaded from Arrow.com.

17.7. Trim and form type: THT 2.54mm pitch (ACJ-xxx)

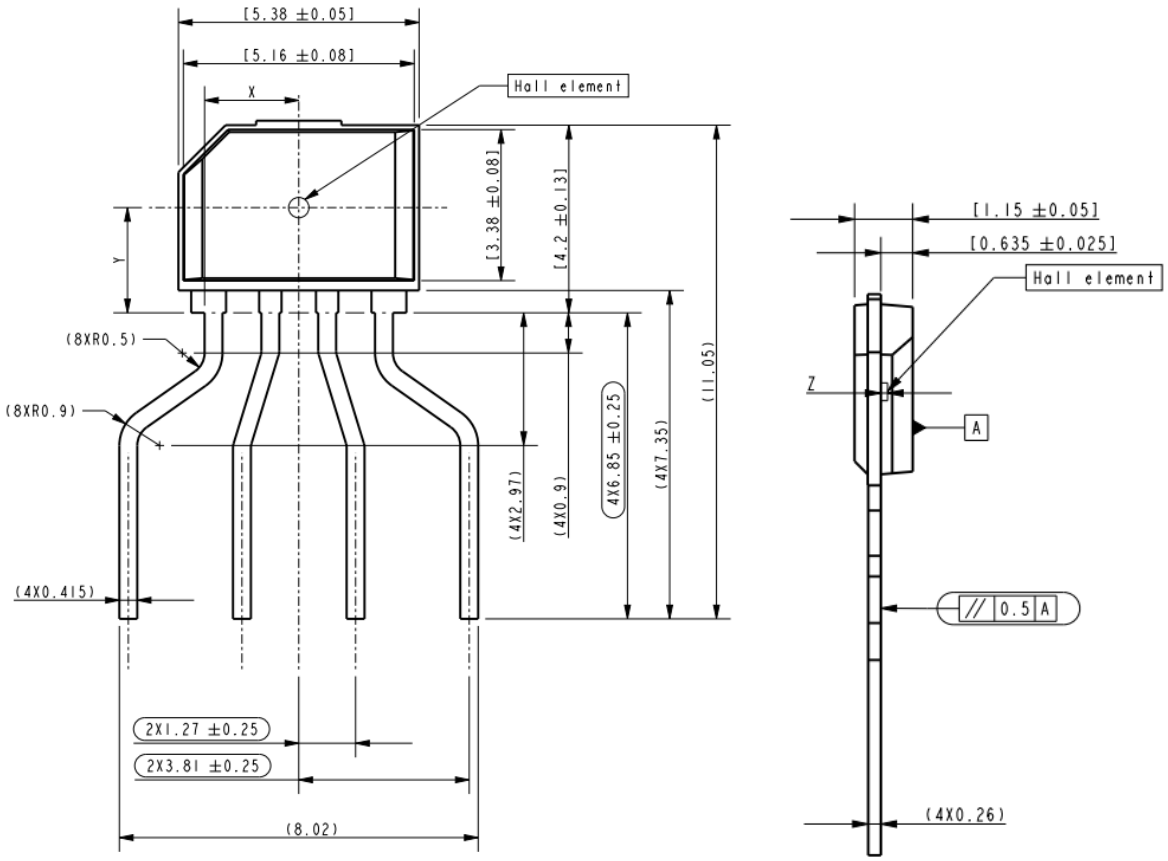

Notes:
1. All controlling dimensions are in milimeters
2. Lead frame material: Alloy C151
3. Lead frame plating material: Spot silver
4. Gate burrs shall not exceed 0.15mm measured from edge of mold flash (flange)
5. Dimensions in elipse are representing the inspection values.
6. Dimensions "X","Y" and "Z" may vary depending on specific product.
Exact dimensions could be found in Melexis datasheet
7. Dimensions in "()" are for information.
8. Dimensions in "[]" are values from previous manufacturing step

Downloaded from Arrow.com.

17.8. Trim and form type: SMD style TFZT (ACY-xxx)

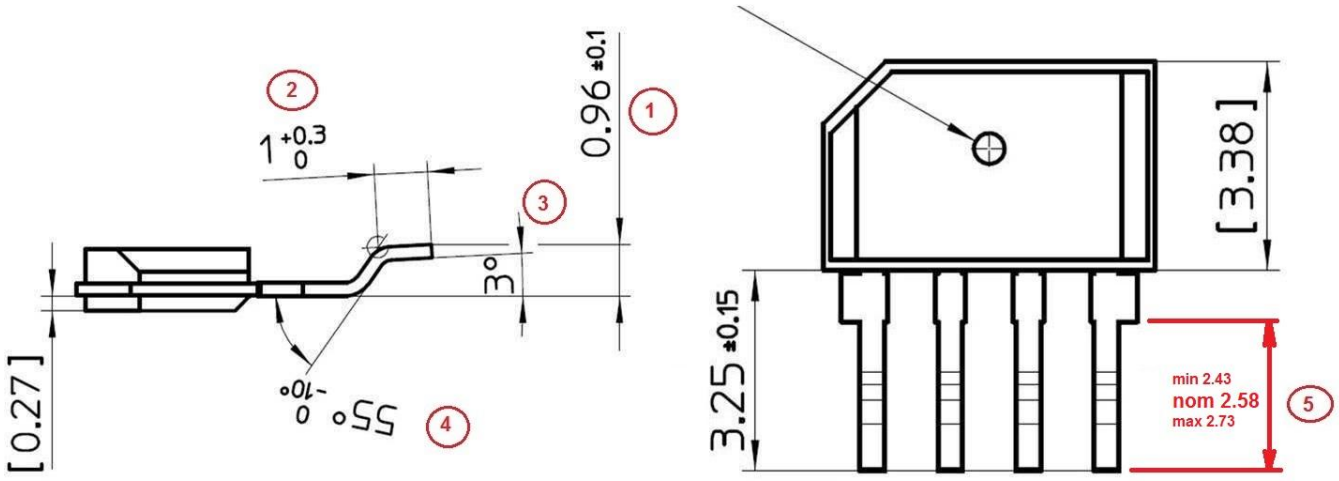

Parameter				
Dim# 1 [mm]	Dim# 2 [mm]	Dim# 3 [deg]	Dime# 4 [deg]	Dime# 5 [mm]
0.96	1	3	50	2.58
±0.1	0.3/-0	±1	±5	±0.15

Downloaded from Arrow.com.

17.9. Trim and form type: SMD style TFT4K1 (ACZ-xxx)

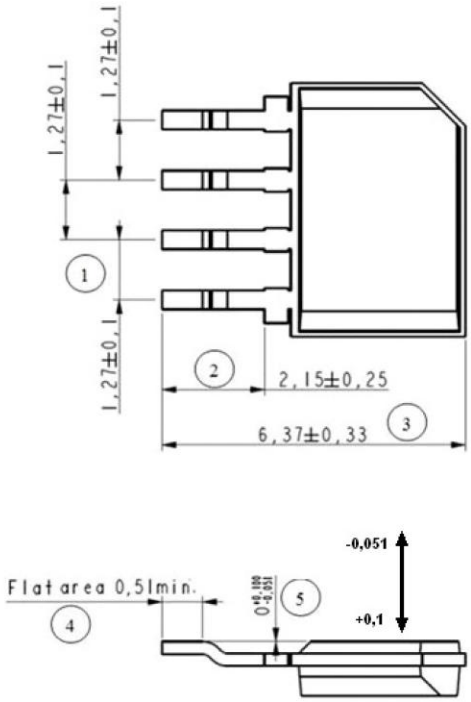

Parameter				
Dim# 1 [mm]	Dim# 2 [mm]	Dim# 3 [mm]	Dim# 4 [mm]	Dim# 5 [mm]
1.27 +/- 0.10	2.15 +/- 0.25	6.37 +/- 0.33	min. 0.51	0 -0.051/+0.10

Downloaded from Arrow.com.

18. Disclaimer

The content of this document is believed to be correct and accurate. However, the content of this document is furnished "as is" for informational use only and no representation, nor warranty is provided by Melexis about its accuracy, nor about the results of its implementation. Melexis assumes no responsibility or liability for any errors or inaccuracies that may appear in this document. Customer will follow the practices contained in this document under its sole responsibility. This documentation is in fact provided without warranty, term, or condition of any kind, either implied or expressed, including but not limited to warranties of merchantability, satisfactory quality, non-infringement, and fitness for purpose. Melexis, its employees and agents and its affiliates' and their employees and agents will not be responsible for any loss, however arising, from the use of, or reliance on this document. Notwithstanding the foregoing, contractual obligations expressly undertaken in writing by Melexis prevail over this disclaimer.

This document is subject to change without notice, and should not be construed as a commitment by Melexis. Therefore, before placing orders or prior to designing the product into a system, users or any third party should obtain the latest version of the relevant information.
Users or any third party must determine the suitability of the product described in this document for its application, including the level of reliability required and determine whether it is fit for a particular purpose.

This document as well as the product here described may be subject to export control regulations. Be aware that export might require a prior authorization from competent authorities. The product is not designed, authorized or warranted to be suitable in applications requiring extended temperature range and/or unusual environmental requirements. High reliability applications, such as medical life-support or life-sustaining equipment or avionics application are specifically excluded by Melexis. The product may not be used for the following applications subject to export control regulations: the development, production, processing, operation, maintenance, storage, recognition or proliferation of:
1. chemical, biological or nuclear weapons, or for the development, production, maintenance or storage of missiles for such weapons;
2. civil firearms, including spare parts or ammunition for such arms;
3. defense related products, or other material for military use or for law enforcement;
4. any applications that, alone or in combination with other goods, substances or organisms could cause serious harm to persons or goods and that can be used as a means of violence in an armed conflict or any similar violent situation.

No license nor any other right or interest is granted to any of Melexis' or third party's intellectual property rights.

If this document is marked "restricted" or with similar words, or if in any case the content of this document is to be reasonably understood as being confidential, the recipient of this document shall not communicate, nor disclose to any third party, any part of the document without Melexis' express written consent. The recipient shall take all necessary measures to apply and preserve the confidential character of the document. In particular, the recipient shall (i) hold document in confidence with at least the same degree of care by which it maintains the confidentiality of its own proprietary and confidential information, but no less than reasonable care; (ii) restrict the disclosure of the document solely to its employees, agents, professional advisors and contractors for the purpose for which this document was received, on a strictly need to know basis and providing that such persons to whom the document is disclosed are bound by confidentiality terms substantially similar to those in this disclaimer; (iii) use the document only in connection with the purpose for which this document was received, and reproduce document only to the extent necessary for such purposes; (iv) not use the document for commercial purposes or to the detriment of Melexis or its customers. The confidentiality obligations set forth in this disclaimer will have indefinite duration and in any case they will be effective for no less than 10 years from the receipt of this document.

This disclaimer will be governed by and construed in accordance with Belgian law and any disputes relating to this disclaimer will be subject to the exclusive jurisdiction of the courts of Brussels, Belgium.

The invalidity or ineffectiveness of any of the provisions of this disclaimer does not affect the validity or effectiveness of the other provisions. The previous versions of this document are repealed.

Melexis © - No part of this document may be reproduced without the prior written consent of Melexis. (2026)

IATF 16949 and ISO 14001 Certified

For the latest revision of this document, visit www.melexis.com/MLX91217

Happy to help you! www.melexis.com/contact

Downloaded from Arrow.com.