OBSOLETE

Overview

KEMET's PEG127 is an electrolytic capacitor with an outstanding electrical performance. The device has a polarized all-welded design, tinned copper wire leads, a negative pole connected to the case, and a plastic insulation. The PEG127 winding is housed in a cylindrical aluminum can with a high purity aluminum lid and high quality rubber gasket, as well as high temperature capability in small case sizes. The PEG127 has 1,600 hours operational life at +150°C for all case sizes. KEMET's automotive grade capacitors meet the demanding Automotive Electronics Council's AEC–Q200 qualification requirements.

Applications

KEMET's PEG127 is a high performance axial electrolytic capacitor. It is designed for automotive applications, with high demands on resistance to vibrations and high ambient temperature.

Benefits

- AEC–Q200 automotive qualified
- 1,600 hours at +150°C
- Resistance to vibrations
- Resistance to high ambient temperature
- High ripple capability
- Polarized all-welded design
- Outstanding electrical performance

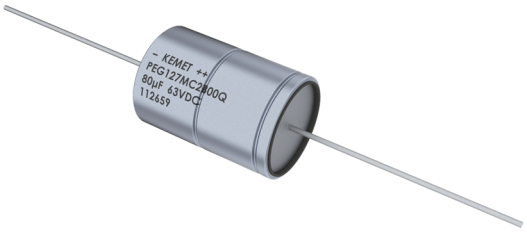

Part Number System

PEG127	H	A	318	0	Q	E4
Series	Rated Voltage (VDC)	Size Code	Capacitance Code (µF)	Version	Capacitance Tolerance	Packaging
Axial Aluminum Electrolytic	H = 25 K = 40 M = 63	See Dimension Table	The last two digits represent significant figures. The first digit indicates the total number digits.	0 = Standard	Q = −10/+30%	See Ordering Options Table

Downloaded from Arrow.com.

Performance Characteristics

OBSOLETE

Item	Performance Characteristics	
Capacitance Range	33 – 1,300 µF	
Rated Voltage	25 – 63 VDC	
Operating Temperature	−40 to +150°C	
Capacitance Tolerance	−10/+30% at 100 Hz/+20°C	
Shelf Life	5,000 hours at +105°C or 10 years at +40°C 0 VDC	
Leakage Current	I = 0.003 CV + 4.0 (µA)	
	C = rated capacitance (µF), V = rated voltage (VDC). Voltage applied for 5 minutes at +20°C.	
Vibration Test Specifications	Procedure	Requirements
	1.5 mm displacement amplitude or 20 g maximum acceleration. Vibration applied for three 2-hour sessions at 10 – 2,000 Hz (capacitor clamped by body).	No leakage of electrolyte or other visible damage. Deviations in capacitance from initial measurements must not exceed: Δ C/C < 5%
Standards	IEC 60384–4 long life grade 40/125/56, AEC–Q200	

Compensation Factor of Ripple Current (RC) vs. Frequency

Frequency	100 Hz	300 Hz	1 kHz	5 kHz	100 kHz
Coefficient	0.35	0.57	0.80	1.00	1.04

Compensation Factor of ESR (5 kHz,+125°C) vs. Frequency

Frequency	300 Hz	1 kHz	5 kHz	100 kHz
Coefficient	2.5	1.4	1.0	0.9

Compensation Factor of ESR (5 kHz,+125°C) vs. Temperature

Frequency	−10°C	60°C	105°C	125°C
Coefficient	5.00	1.50	1.1	1

Downloaded from Arrow.com.

Test Method & Performance

OBSOLETE

Endurance Life Test	
Conditions	Performance
Temperature	+150°C
Test Duration	1,600 hours
Ripple Current	Maximum ripple current specified in table
Voltage	The sum of DC voltage and the peak AC voltage must not exceed the rated voltage of the capacitor
Performance	**The following specifications will be satisfied when the capacitor is tested at +20°C:**
Capacitance Change	Within 15% of the initial value
Equivalent Series Resistance	Does not exceed 200% of the initial value
Leakage Current	Does not exceed leakage current limit

Ordering Options Table

Packaging Kind	Lead Length (mm)	Lead and Packaging Code
Standard Bulk Packaging Options		
Bulk (box)	42 +3/−2	L1 (Obsolete)
T and R	See Dimension Table	T1
Tray	42 +3/−2	E4

Downloaded from Arrow.com.

Dimensions – Millimeters

OBSOLETE

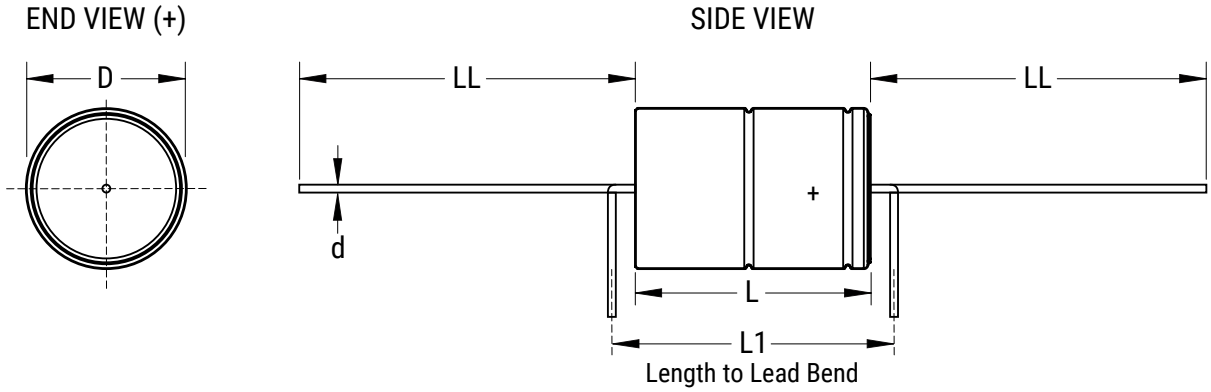

Size Code	Dimensions in mm				Tray	Taped	Approximate Weight Grams
	D	L	L1	d	LL	LL	
	±0.5	±1	Minimum	±0.03	+3/-2	+3/-2	
A	10	20.0	26.0	0.8	42	31	3
B	10	29.0	35.0	0.8	42	27	4
C	13	20.0	26.0	0.8	42	31	4
D	13	29.0	35.0	0.8	42	27	6
E	13	37.0	43.0	0.8	42	24	7

Note: L1 is KEMET's recommendation for minimum distance between symmetrical lead bend. Available only for customer specific part numbers. Lead bend dimensions must be specified and confirmed per article.

Downloaded from Arrow.com.

Shelf Life

OBSOLETE

The capacitance, ESR and impedance of a capacitor will not change significantly after extended storage periods, however the leakage current will very slowly increase. KEMET products are particularly stable and allow a shelf life in excess of ten years at 40°C. See sectional specification under each product series for specific data.

Failure Rate

Estimated field failure rate: ≤ 0.15 ppm (failures per year/produced number of capacitors per year).
The expected failure rate for this capacitor range is based on field experience for capacitors with structural similarity.

Environmental Compliance

All Part Numbers in this datasheet are Reach and RoHS compliant and Halogen-Free.

As an environmentally conscious company, KEMET is working continuously with improvements concerning the environmental effects of both our capacitors and their production.

In Europe (RoHS Directive) and in some other geographical areas such as China, legislation has been put in place to prevent the use of some hazardous materials, such as lead (Pb), in electronic equipment. All products in this catalog are produced to help our customers' obligations to guarantee their products and fulfill these legislative requirements. The only material of concern in our products has been lead (Pb), which has been removed from all designs to fulfill the requirement of containing less than 0.1% of lead in any homogeneous material. KEMET will closely follow any changes in legislation worldwide and make any necessary changes in its products, whenever needed.

Some customer segments such as medical, military and automotive electronics may still require the use of lead in electrode coatings. To clarify the situation and distinguish products from each other, a special symbol is used on the packaging labels for RoHS compatible capacitors.

Due to customer requirements, there may appear additional markings such as lead-free (LF), or lead-free wires (LFW) on the label.

Downloaded from Arrow.com.

Table 1 – Ratings & Part Number Reference

OBSOLETE

VDC	Rated Capacitance	Size Code	Case Size	Ripple Current Maximum				ESR Maximum			Part Number
	100 Hz 20°C (µF)		D x L (mm)	≥ 5 kHz 100°C (A)	≥ 5 kHz 125°C (A)	≥ 5 kHz 140°C (A)	≥ 5 kHz 150°C (A)	100 Hz 20°C (mΩ)	100 kHz 20°C (mΩ)	5 – 100 kHz 125 – 150°C (mΩ)	
25	180	A	10 x 20	2.4	1.7	1.1	0.49	560	255	80	PEG127HA3180Q(1)
25	360	B	10 x 29	3.5	2.5	1.6	0.71	281	130	43	PEG127HB3360Q(1)
25	470	C	13 x 20	3.8	2.8	1.8	0.79	226	110	40	PEG127HC3470Q(1)
25	900	D	13 x 29	5.6	4.0	2.6	1.15	118	58	23	PEG127HD3900Q(1)
25	1300	E	13 x 37	6.6	4.8	3.0	1.35	85	42	18	PEG127HE4130Q(1)
40	110	A	10 x 20	2.3	1.7	1.1	0.48	710	240	82	PEG127KA3110Q(1)
40	220	B	10 x 29	3.4	2.5	1.6	0.70	360	125	45	PEG127KB3220Q(1)
40	270	C	13 x 20	3.7	2.7	1.7	0.77	301	110	42	PEG127KC3270Q(1)
40	520	D	13 x 29	5.4	3.9	2.5	1.11	157	58	24	PEG127KD3520Q(1)
40	750	E	13 x 37	6.5	4.7	3.0	1.32	110	42	19	PEG127KE3750Q(1)
63	33	A	10 x 20	1.6	1.1	0.7	0.32	1700	370	181	PEG127MA2330Q(1)
63	68	B	10 x 29	2.4	1.7	1.1	0.49	825	185	92	PEG127MB2680Q(1)
63	80	C	13 x 20	2.7	1.9	1.2	0.55	704	160	82	PEG127MC2800Q(1)
63	160	D	13 x 29	4.0	2.9	1.8	0.83	354	82	44	PEG127MD3160Q(1)
63	230	E	13 x 37	4.9	3.5	2.2	1.00	250	59	32	PEG127ME3230Q(1)
VDC	Rated Capacitance	Size Code	Case Size	Ripple Current				ESR			Part Number

(1) Insert packaging code. See Ordering Options Table for available options.

Marking

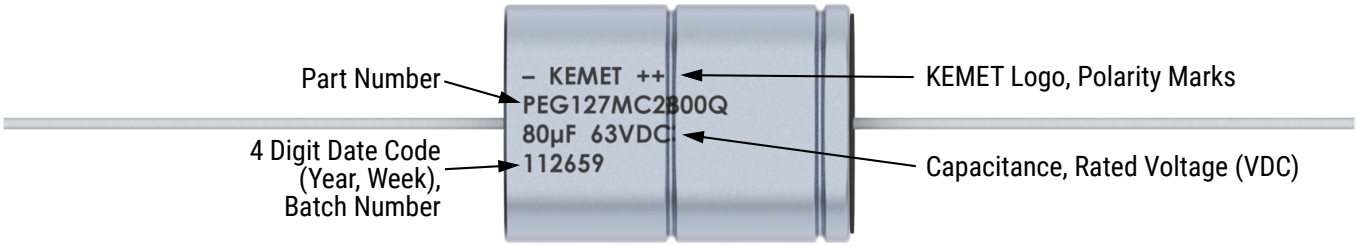

Downloaded from Arrow.com.

Construction

OBSOLETE

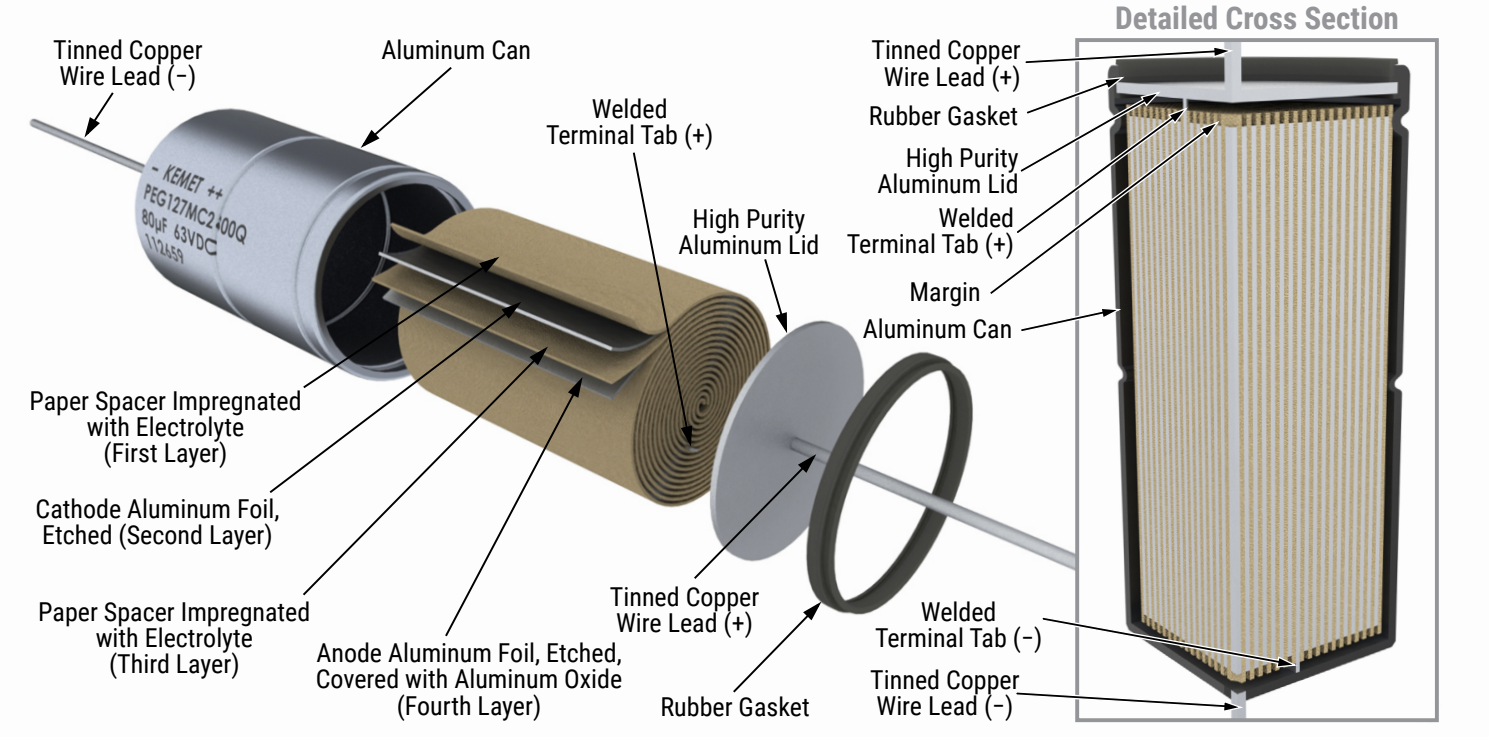

Downloaded from Arrow.com.

Construction Data

OBSOLETE

The manufacturing process begins with the anode foil being electrochemically etched to increase the surface area and then "formed" to produce the aluminum oxide layer. Both the anode and cathode foils are then interleaved with absorbent paper and wound into a cylinder. During the winding process, aluminum tabs are attached to each foil to provide the electrical contact.

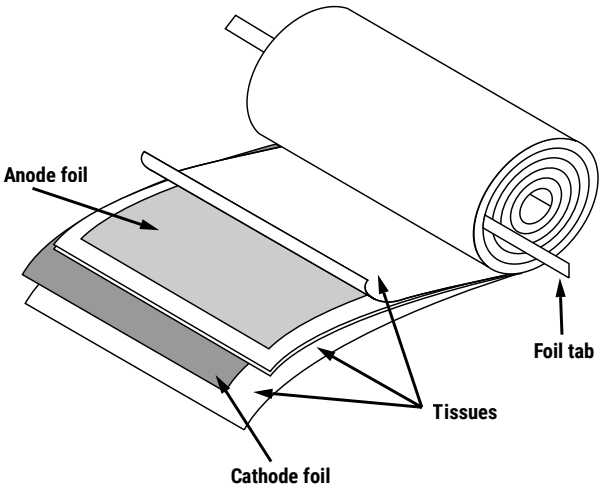

The winding is assembled to the capacitor Al-can and to the Al-lid. The can is filled with electrolyte and the winding is impregnated during a vacuum treatment. The capacitor is sealed. Throughout the process, all materials inside the housing must be maintained at the highest purity and be compatible with the electrolyte.

Each capacitor is aged and tested before being packed. The purpose of aging is to repair any damage in the oxide layer and thus reduce the leakage current to a very low level. Aging is carried out at elevated temperature and is accomplished by applying voltage to the device while carefully controlling the supply current. The process takes between 2 and 20 hours, depending on voltage rating.

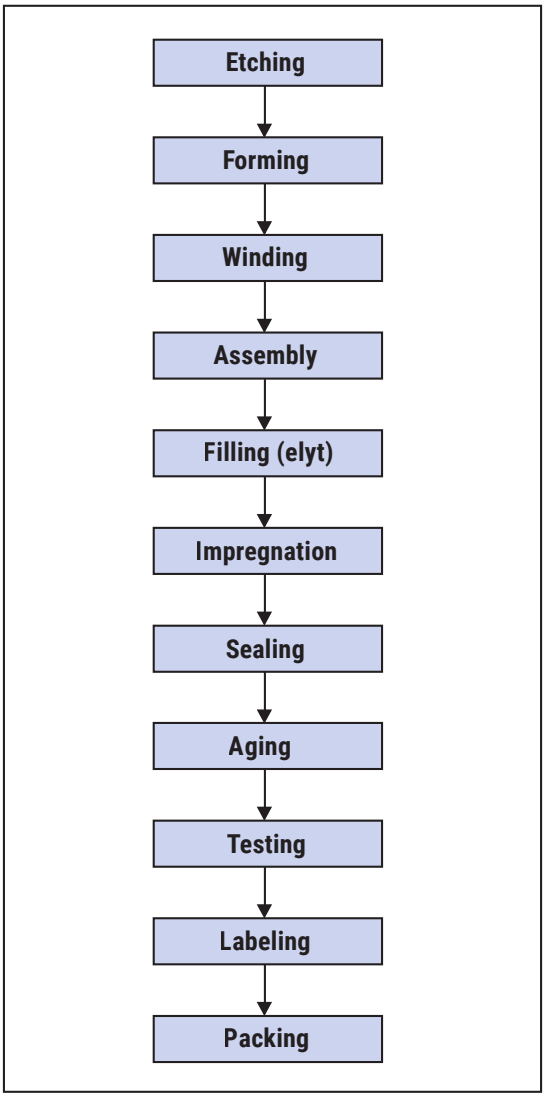

Damage to the oxide layer can occur due to a variety of reasons:

- Slitting of the anode foil after forming
- Attaching the tabs to the anode foil
- Minor mechanical damage caused during winding

The following tests are applied for each individual capacitor.

Electrical:

- Leakage current
- Capacitance
- ESR
- Tan Delta

Mechanical/Visual:

- Pull strength test of wire terminals
- Print detail
- Box labels
- Packaging, including packed quantity

Downloaded from Arrow.com.

KEMET Electronics Corporation Sales Offices

OBSOLETE

For a complete list of our global sales offices, please visit https://www.yageogroup.com/SalesResources/SalesOffices

Disclaimer

YAGEO Corporation and its affiliates do not recommend the use of commercial or automotive grade products for high reliability applications or manned space flight.

All product specifications, statements, information and data (collectively, the "Information") in this datasheet are subject to change. The customer is responsible for checking and verifying the extent to which the Information contained in this publication is applicable to an order at the time the order is placed. All Information given herein is believed to be accurate and reliable, but it is presented without guarantee, warranty, or responsibility of any kind, expressed or implied.

Statements of suitability for certain applications are based on KEMET Electronics Corporation's ("KEMET") knowledge of typical operating conditions for such applications, but are not intended to constitute – and KEMET specifically disclaims – any warranty concerning suitability for a specific customer application or use. The Information is intended for use only by customers who have the requisite experience and capability to determine the correct products for their application. Any technical advice inferred from this Information or otherwise provided by KEMET with reference to the use of KEMET's products is given gratis, and KEMET assumes no obligation or liability for the advice given or results obtained.

Although KEMET designs and manufactures its products to the most stringent quality and safety standards, given the current state of the art, isolated component failures may still occur. Accordingly, customer applications which require a high degree of reliability or safety should employ suitable designs or other safeguards (such as installation of protective circuitry or redundancies) in order to ensure that the failure of an electrical component does not result in a risk of personal injury or property damage.

Although all product–related warnings, cautions and notes must be observed, the customer should not assume that all safety measures are indicated or that other measures may not be required.

KEMET requires its products to be packaged and shipped on pallets. This is because KEMET's products are specifically designed to be packed onto pallets during shipment. If for any reason, the products are removed from pallets by the shipping party and shipped to the end customer, then additional external protection is required. In this instance, an external box with two carton layers and an upwards orientation sticker must be used by the shipping party, with the empty space filled with filling material, and afterwards sealing the box. If this packing and packaging guideline is not followed by the shipping party, the shipping party, and not KEMET, will be held responsible for any packaging, packing and/or product damages upon delivery of the products to the end customer. KEMET hereby disclaims any liability for damages to the products or otherwise that have been, or threaten to be, inflicted, result from or are in any way related to the packaging, packing or damage by the shipping party in contravention of the packing and packaging guidelines herein.

KEMET is a registered trademark of KEMET Electronics Corporation.

Downloaded from Arrow.com.