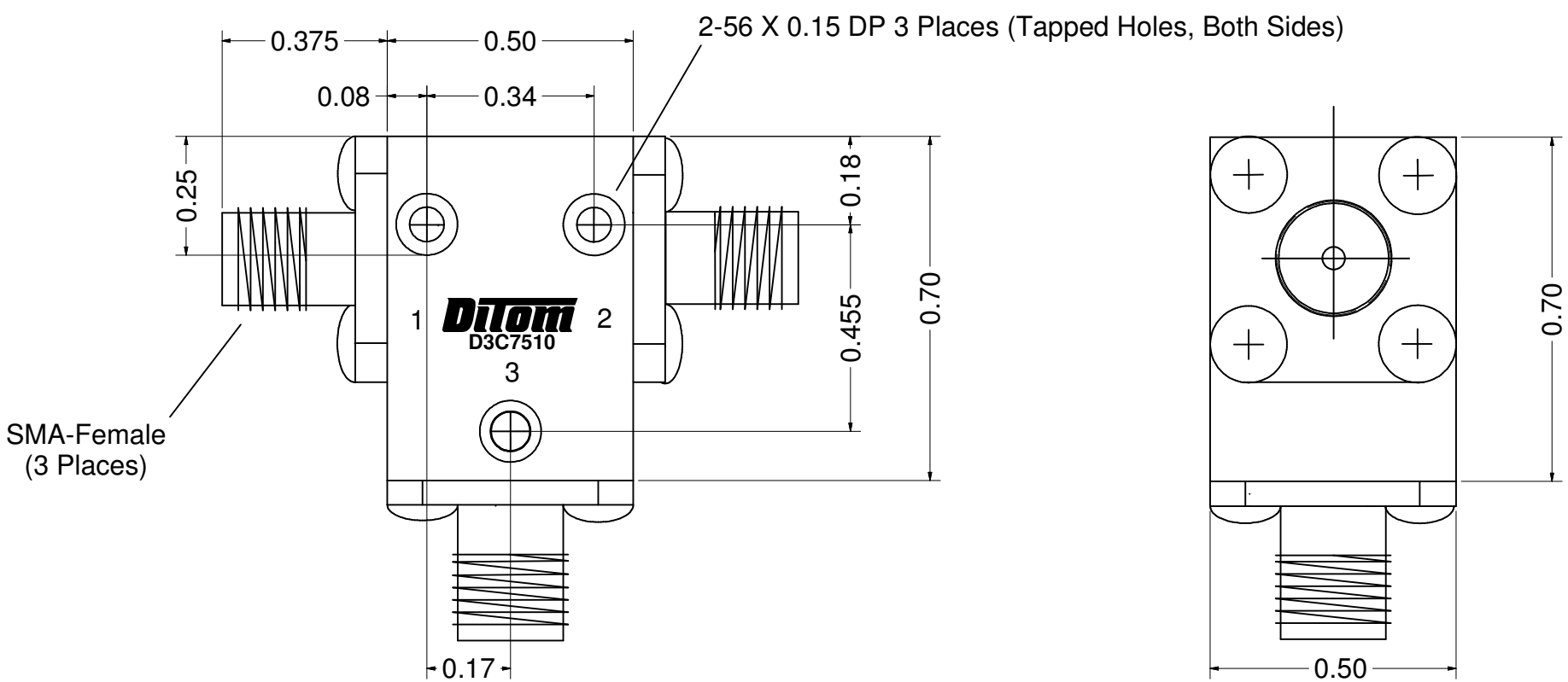

ELECTRICAL SPECIFICATIONS

FREQUENCY RANGE (GHz):	7.500 - 10.000
IMPEDANCE:	50 OHMS
ISOLATION (dB):	23 TYP 20 MIN
INSERTION LOSS (dB):	0.30 TYP 0.50 MAX
VSWR:	1.15 TYP 1.25 MAX
POWER: AVG (ALL PORTS):	10 W
PEAK:	50 W

MECHANICAL SPECIFICATIONS

CONNECTORS:	SMA-FEMALE, STAINLESS STEEL, PASSIVATE
CONTACT PINS:	BERYLLIUM COPPER, GOLD PLATE
OPERATING TEMPERATURE:	-30 to +65 C
WEIGHT (APPROX):	0.74 OUNCES

DIMENSIONS IN INCHES, UNLESS OTHERWISE SPECIFIED	DiTom MICROWAVE INC. Fresno, California, USA
TOLERANCE XX±0.03 XXX±0.010	TITLE 7.50 - 10.00 GHz SMA-Female Circulator
SCALE 6:1	MODEL NO D3C7510 / REV

Downloaded from Arrow.com.