Data sheet

UR20-FBC-DN

Weidmüller Interface GmbH & Co. KG
Klingenbergstraße 26
D-32758 Detmold
Germany

www.weidmueller.com



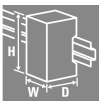



More performance. Simplified.
u-remote.Weidmuller u-remote – our innovative remote I/O concept with IP 20 which focuses purely on user benefits: tailored planning, faster installation, safer start-up, and no more downtime for considerably improved performance and greater productivity.
Reduce the size of your cabinets with u-remote, thanks to the narrowest modular design on the market and the need for fewer power-feed modules. Our u-remote technology offers tool-free assembly while the modular “sandwich” design and integrated web server speed up installation, both in the cabinet and machine. Status LEDs on the channel and each u-remote module enable reliable diagnosis and rapid service.
Our products boost the availability of your machines and systems, and ensure smooth processes, from planning to operation.
u-remote stands for “More Performance.” Simplified.

General ordering data

Version	Remote I/O fieldbus coupler, IP20, DeviceNet
Order No.	1334900000
Type	UR20-FBC-DN
GTIN (EAN)	4050118138252
Qty.	1 items

Downloaded from Arrow.com.

Data sheet

UR20-FBC-DN

Weidmüller Interface GmbH & Co. KG
Klingenbergstraße 26
D-32758 Detmold
Germany

www.weidmueller.com

Technical data

Approvals

Approvals	
ROHS	Conform
UL File Number Search	UL Website
Certificate no. (cULus)	E141197
Certificate no. (cULusEX)	E223527

Dimensions and weights

Depth	76 mm	Depth (inches)	2.9921 inch
Height	120 mm	Height (inches)	4.7244 inch
Width	52 mm	Width (inches)	2.0472 inch
Mounting dimension - height	128 mm	Net weight	220 g

Temperatures

Storage temperature	-40 °C ... +85 °C	Operating temperature	-20 °C...60 °C

Environmental Product Compliance

RoHS Compliance Status	Compliant with exemption	
RoHS Exemption (if applicable/known)	7a, 7cI	
REACH SVHC	Lead 7439-92-1, 6,6'-di-tert-butyl-2,2'-methylenedi-p-cresol 119-47-1	
SCIP	98e19a7e-033b-4e68-93e3-c47b30de875e	
Product Carbon Footprint	Cradle to gate	21.713 kg CO2 eq.

Connection data

Wire cross-section, finely stranded, max. (AWG)	AWG 16	Wire cross-section, finely stranded, min. (AWG)	AWG 26
Wire cross-section, solid, max. (AWG)	AWG 16	Wire cross-section, solid, min. (AWG)	AWG 26
Type of connection	PUSH IN	Wire cross-section, solid, max.	1.5 mm²
Wire cross-section, solid, min.	0.14 mm²	Wire connection cross-section, finely stranded, max.	1.5 mm²
Wire connection cross section, finely stranded, min.	0.14 mm²		

General data

Vibration resistance	5 Hz ≤ f ≤ 8.4 Hz: 3.5-mm amplitude as per IEC 60068-2-6, 8.4 Hz ≤ f ≤ 150 Hz: 1 g acceleration as per IEC 60068-2-6	UL 94 flammability rating	V-0
Test voltage	500 V	Surge voltage category	II
Pollution severity	2	Mounting rail	TS 35
Air pressure (operation)	≥ 795 hPa (height ≤ 2000 m) as per DIN EN 61131-2	Air humidity (transport)	10% to 95%, non-condensing as per DIN EN 61131-2

Downloaded from Arrow.com.

UR20-FBC-DN

Weidmüller Interface GmbH & Co. KG
Klingenbergstraße 26
D-32758 Detmold
Germany

www.weidmueller.com

Technical data

Air pressure (transport)	1013 hPa (height 0 m) to 700 hPa (height 3000 m) as per DIN EN 61131-2	Air pressure (storage)	1013 hPa (height 0 m) to 700 hPa (height 3000 m) as per DIN EN 61131-2
Air humidity (operation)	10% to 95%, non-condensing as per DIN EN 61131-2	Air humidity (storage)	10% to 95%, non-condensing as per DIN EN 61131-2
Shock	15 g over 11 ms, half sinus wave, acc. to IEC 60068-2-27		

Power supply

Supply voltage	24 V DC +20 %/ -15 %, via the system bus	Feed current for the system, max.	4 A
Feed current for IIN (input current path) , max.	10 A	Current consumption from Isys, typ.	75 mA (+15 mA from DeviceNet supply)
Supply voltage for outputs	24 V DC +20 %/ -15 %	Supply voltage system and inputs	24 V DC +20 %/ -15 %
Feed current for output current path, max.	10 A		

System data

Module type	Bus coupler	Interface	u-remote system bus
Process data	1008 Byte	Number of modules, max.	64
Configuration interface	Micro USB 2.0	Connection type	Socket for 5-pole PCB plug-in connector
Field bus protocol	DeviceNet	Transmission rate of field bus, max.	500 kbit/s
Transmission speed of system bus, max.	48 Mbit/s	Parameter data	4 kByte
Diagnostic data	3008 Byte		

Important note

Product information	The matching end brackets are included with the coupler.

Classifications

ETIM 8.0	EC001603	ETIM 9.0	EC001603
ETIM 10.0	EC001603	ECLASS 14.0	27-24-26-07
ECLASS 15.0	27-24-26-07		

Downloaded from Arrow.com.

UR20-FBC-DN

Weidmüller Interface GmbH & Co. KG
Klingenbergstraße 26
D-32758 Detmold
Germany

www.weidmueller.com

Drawings

Block diagram

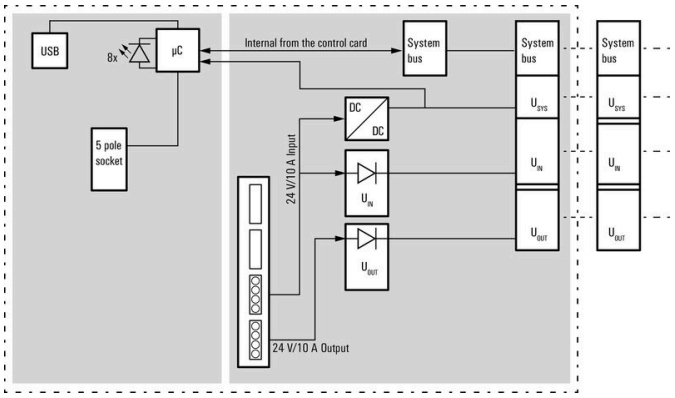

Connection diagram

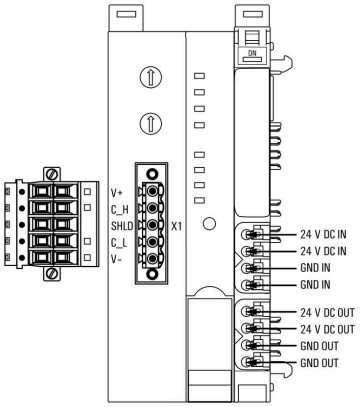

Explanation of abbreviations

Field bus coupler

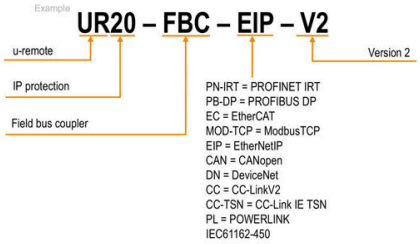

Downloaded from Arrow.com.