Data Sheet | Item Number: 750-486

4-channel analog input; 0/4 … 20 mA; Single-ended; NAMUR NE 43; Intrinsically safe

https://www.wago.com/750-486

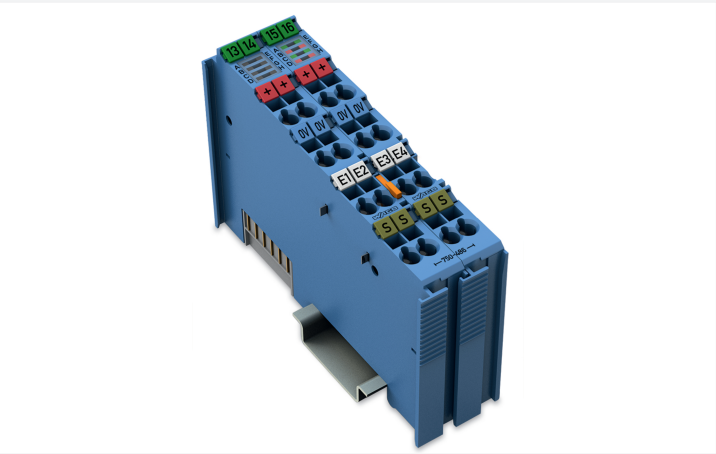

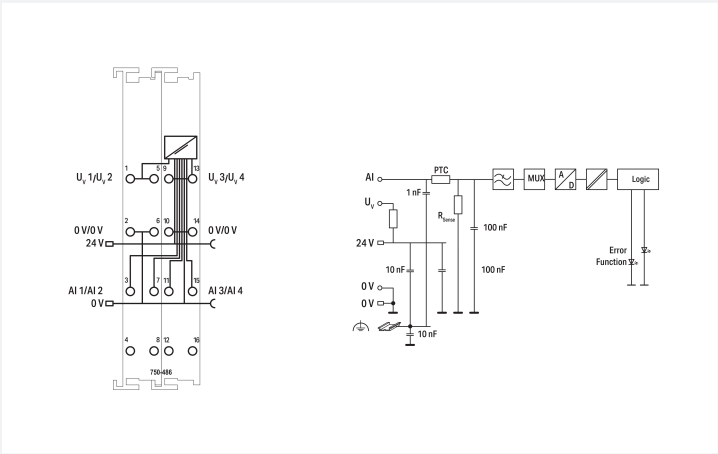

Color: ■ blue

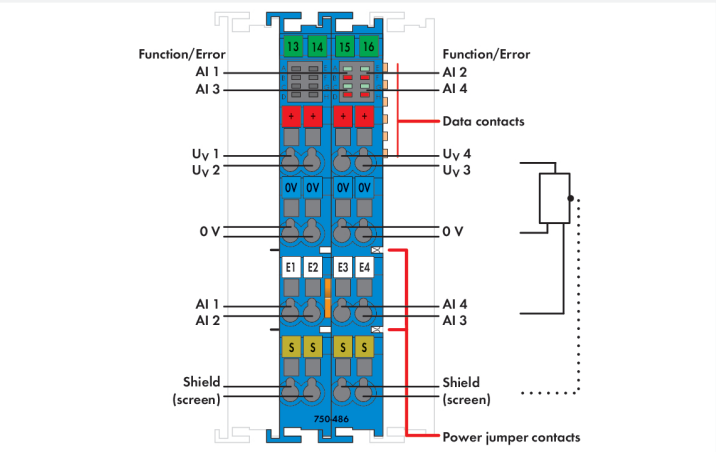

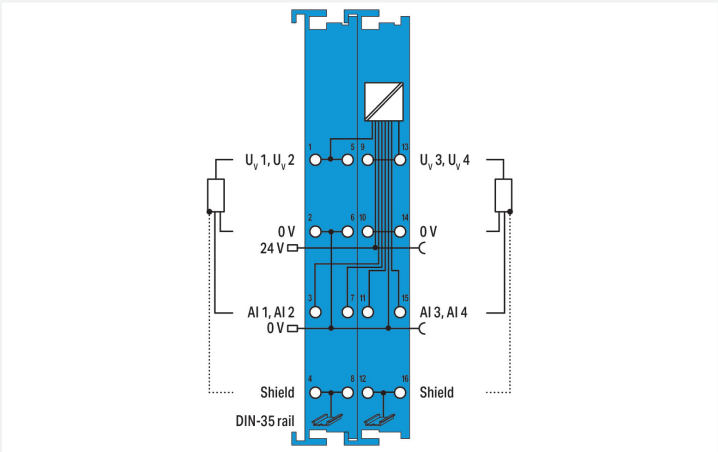

This analog input module supplies intrinsically safe signal conditioners in hazardous areas classified as Zone 0 and Zone 1, and processes their analog measurement signals.
The WAGO I/O System 750/753 must be installed either in Zone 2 or in a non-hazardous area.
The 24 V supply voltage is fed in via the power jumper contacts.
The transmitter power supply is conditionally short-circuit protected.
The shield connection directly connects to the DIN-rail.
Indicators:

- Green LED (availability ON/OFF)
- Red LED (measurement range overflow/underflow, wire breakage, short circuit)

Field and system levels are electrically isolated.

Downloaded from Arrow.com.

Notes

Note	The analog output module must only be operated with a 24 VDC Ex i power supply! General information on explosion protection, including installation regulations, can be found in the WAGO I/O System 750/753 manuals!

Technical data

Item description	4-Channel Analog Input; 0/4 ... 20 mA; NAMUR NE43
Number of analog inputs	4
Total number of channels (module)	4
Signal type	Current
Signal type (current)	0 ... 20 mADC; 4 ... 20 mADC; 3.6 ... 21 mADC
Sensor connection	2 x (3-wire)
Signal characteristics	Single-ended
Sensor supply	15 VDC
Resolution [bit]	12 bits
Conversion time (typ.)	10 ms
Measurement error (reference temperature)	25 °C
Measurement error, deviation (max.) from the upper-range value	±0.1 %
Temperature error (max.) of the upper-range value	±0.01 %/K
Input resistance (max.)	200 Ω
Intrinsically safe Ex i	Yes
Data width	4 x 16-bit data; 4 x 8-bit control/status (optional)
Supply voltage (system)	5 VDC; via data contacts
Current consumption (system supply)	45 mA
Supply voltage (field)	24 VDC; (Ex i power supply: U_o = max. 26.8 V); via power jumper contacts (supply via blade contact; distribution via spring contact)
Current consumption, field supply (module with no external load)	19 mA
Power consumption $P_{max.}$	2.7 W (at 4 x 21 mA signal current)
Power loss P_l	1.5 W (at 4 x 21 mA signal current)
Isolation	UM = 375 V system/supply
Number of incoming power jumper contacts	2
Number of outgoing power jumper contacts	2
Current carrying capacity (power jumper contacts)	1 A
Indicators	LED (A, E, C, G) green: Function AI 1 ... AI 4; LED (B, F, D, H) red: Error AI 1 ... AI 4

Explosion protection

Identification	**ATEX:** II 3 (1) G Ex ec [ia Ga] IIC T4 Gc; II (1) D [Ex ia Da] IIIC; I (M1) [Ex ia Ma] I **IECEx/INMETRO:** Ex ec [ia Ga] IIC T4 Gc; [Ex ia Da] IIIC; [Ex ia Ma] I
Ex standard	EN IEC 60079-0, -7, -11
Safety-relevant data (circuit)	U_o = 26.8 V; I_o = 96.6 mA; P_o = 615 mW; linear characteristic curve
Reactances Ex ia IIC	L_o = 3.81 mH; C_o = 92 nF
Reactances Ex ia IIB	L_o = 15.24 mH; C_o = 720 nF
Reactances Ex ia IIA	L_o = 30.48 mH; C_o = 2.37 µF
Reactances Ex ia I	L_o = 50 mH; C_o = 4.2 µF
Reactances (note)	Reactances without accounting for the concurrence of capacitance (C_o) and inductance (L_o)

Downloaded from Arrow.com.

Connection Data

Connection technology: I/O	16 x CAGE CLAMP®
Connectable conductor materials	Copper
Connection type	Inputs/outputs
Solid conductor	0.08 … 2.5 mm² / 28 … 14 AWG
Fine-stranded conductor	0.08 … 2.5 mm² / 28 … 14 AWG
Strip length	8 … 9 mm / 0.31 … 0.35 inches

Physical data

Width	24 mm / 0.945 inches
Height	100 mm / 3.937 inches
Depth	67.8 mm / 2.669 inches
Depth from upper-edge of DIN-rail	60.6 mm / 2.386 inches

Mechanical data

Mounting type	DIN-35 rail

Material data

Color	blue
Housing material	Polycarbonate; polyamide 6.6
Fire load	1.69 MJ
Weight	116 g
Conformity marking	CE

Environmental requirements

Ambient temperature (operation)	0 … +55 °C
Ambient temperature (storage)	-25 … +85 °C
Protection type	IP20
Pollution degree	2 per IEC 61131-2
Operating altitude	0 … 2000 m / 0 … 6562 ft
Mounting position	Horizontal left, horizontal right, horizontal top, horizontal bottom, vertical top and vertical bottom
Relative humidity (without condensation)	95 %
Vibration resistance	Per IEC 60068-2-6
Shock resistance	15g per IEC 60068-2-27
EMC immunity to interference	per EN 61000-6-2, marine applications
EMC emission of interference	per EN 61000-6-3, marine applications
Exposure to pollutants	per IEC 60068-2-42 and IEC 60068-2-43
Permissible H_2S contaminant concentration at a relative humidity 75 %	10 ppm
Permissible SO_2 contaminant concentration at a relative humidity 75 %	25 ppm

Commercial data

PU (SPU)	1 pcs
Packaging type	Box
Country of origin	DE
GTIN	4055143516044
Customs tariff number	85437090990

Downloaded from Arrow.com.

Product Classification

UNSPSC	32151705
eCl@ss 10.0	27-24-26-01
eCl@ss 9.0	27-24-26-01
ETIM 9.0	EC001596
ETIM 10.0	EC001596
ECCN	NO US CLASSIFICATION

Environmental Product Compliance

CAS-No.	1303-86-2 1317-36-8 7439-92-1
REACH Candidate List Substance	Diboron trioxide Lead Lead monoxide
RoHS Compliance Status	Compliant,With Exemption
RoHS Exemption	6(c) 7(a) 7(c)-I 7(c)-II
SCIP notification number (Austria)	549055d6-6f9f-4c9d-b855-7486a1d6cb3a
SCIP notification number (Belgium)	7c5e0ec5-4b5c-495e-85ab-8c4b17d0b137
SCIP notification number (Bulgaria)	485c2c34-1cda-4cc4-a49f-bdbe01d8d580
SCIP notification number (Czech Republic)	474cd881-197a-4e7f-9d9d-56ae52483311
SCIP notification number (Denmark)	7f8cc8a2-4c17-4246-901a-f36a098de931
SCIP notification number (Finland)	7602d62b-94b5-44a6-8da6-ccfea8ef5ecf
SCIP notification number (France)	60a2160b-b980-4efb-ba16-b12cd1cabb0d
SCIP notification number (Germany)	9e11c3b8-9702-4919-a91b-bda35f90810c
SCIP notification number (Hungary)	8119bf7f-3b21-48b7-ab84-a594bf80a530
SCIP notification number (Italy)	40b21ee0-9bc8-486f-9958-c6e22e9afb1b
SCIP notification number (Netherlands)	97e4e9f6-cc3f-4289-9a68-d071c0e6fa99
SCIP notification number (Poland)	f0ea8734-9828-4e42-86bd-3c858df8aa95
SCIP notification number (Romania)	8d08dea9-f978-4ce4-9dc1-dcf3e759b55f
SCIP notification number (Sweden)	c378fdab-274a-422c-a91c-1e8be031c67d

Approvals / Certificates

General approvals

Approval	Standard	Certificate Name
EAC GZO Almaty Standart	TP TC 020/2011	EAC CoC 03083
KC National Radio Research Agency	Article 58-2, Clause 3	MSIP-REM-W43-AIM750
UL Underwriters Laboratories Inc. (ORDINARY LOCATIONS)	-	E175199

Declarations of conformity and manufacturer's declarations

Approval	Standard	Certificate Name
EU-Ex-Declaration of Conformity WAGO GmbH & Co. KG	-	-
UK-Ex-Declaration of Conformity WAGO GmbH & Co. KG	-	-

Downloaded from Arrow.com.

Approvals for marine applications

Approval	Standard	Certificate Name
ABS American Bureau of Shipping	-	25-0415412
DNV DNV GL SE	DNV-CG-0339,Aug.2021	TAA0000194
KR Korean Register of Shipping	-	KR HMB05880-AC001
LR Lloyds Register EMEA	-	LR22180952TA
PRS Polski Rejestr Statków	-	TE/1101/880590/23
RINA RINA Germany GmbH	-	ELE343521XG001

Approvals for hazardous areas

Approval	Standard	Certificate Name
ATEX TUEV Nord Cert GmbH	EN 60079	TUEV12ATEX106032X (Ex ec[iaGa] IIC T4 Gc, [Ex iaDa] IIIC, [Ex iaMa] I)
CCC CNEX	CNCA-C23-01	2020312310000211 (Ex ec [iaGa] IIC T4 Gc, [Ex iaDa] II-IC, [Ex iaMa] I)
IECEx TUEV Nord Cert GmbH	IEC 60079	IECEx TUN12.0039X (Ex ec [iaGa] IIC T4 Gc, [Ex iaDa] II-IC, [Ex iaMa] I)
INMETRO TÜV Rheinland do Brasil Ltda.	-	TÜV_14.1911_X
KTL Korea Testing Laboratory	KOSHA Article 34, IEC60079-0	21-KA4BO-0606X
UKEx Element Materials Technology UK	-	EMA21UKEX0069X
UL Underwriters Laboratories Inc. (HAZARDOUS LOCATIONS)	UL 121201	E198726

Downloads

Environmental Product Compliance

Compliance Search

Environmental Product Compliance 750-486

Documentation

Manual

Product Manual 4AI 0/4–20 mA, Ex i	3335842187 | 5 | en-US | 2025-09-09 15:40 14.11.2025	pdf 3286.26 KB	

System Description

750/753 Series I/O-System – General Product Information	pdf 953.35 KB	
Overview on WAGO-I/O-SYSTEM 750 approvals	pdf 770.48 KB	
Ex i Overview	pdf 442.07 KB	

Bid Text

750-486	19.02.2019	xml 6.40 KB	
750-486	06.10.2017	doc 32.00 KB	

Instruction Leaflet

CCC Ex (Additional information)	26.04.2023	pdf 143.96 KB	

Downloaded from Arrow.com.

CAD/CAE-Data

CAD data	CAE data
2D/3D Models 750-486	EPLAN Data Portal 750-486
	WSCAD Universe 750-486
	ZUKEN Portal 750-486

1 Compatible Products

1.1 Optional Accessories

1.1.1 DIN-rail

1.1.1.1 Mounting accessories

Item No.: 210-196
Aluminum carrier rail; 35 x 8.2 mm; 1.6 mm thick; 2 m long; unslotted; similar to EN 60715; silver-colored

Item No.: 210-198
Copper carrier rail; 35 x 15 mm; 2.3 mm thick; 2 m long; unslotted; according to EN 60715; copper-colored

Item No.: 210-197
Steel carrier rail; 35 x 15 mm; 1.5 mm thick; 2 m long; slotted; similar to EN 60715; silver-colored

Item No.: 210-114
Steel carrier rail; 35 x 15 mm; 1.5 mm thick; 2 m long; unslotted; similar to EN 60715; silver-colored

Item No.: 210-118
Steel carrier rail; 35 x 15 mm; 2.3 mm thick; 2 m long; unslotted; according to EN 60715; silver-colored

Item No.: 210-112
Steel carrier rail; 35 x 7.5 mm; 1 mm thick; 2 m long; slotted; according to EN 60715; "Hole width 25 mm; silver-colored

Item No.: 210-113
Steel carrier rail; 35 x 7.5 mm; 1 mm thick; 2 m long; unslotted; according to EN 60715; silver-colored

1.1.2 Marking

1.1.2.1 Group marker carrier

Item No.: 750-107
Group marker carrier

1.1.2.2 Marker

Item No.: 2009-145/000-006
Mini-WSB Inline; for Smart Printer; 1700 pieces on roll; stretchable 5 - 5.2 mm; plain; snap-on type; blue

Item No.: 2009-145/000-007
Mini-WSB Inline; for Smart Printer; 1700 pieces on roll; stretchable 5 - 5.2 mm; plain; snap-on type; gray

Item No.: 2009-145/000-023
Mini-WSB Inline; for Smart Printer; 1700 pieces on roll; stretchable 5 - 5.2 mm; plain; snap-on type; green

Item No.: 2009-145/000-012
Mini-WSB Inline; for Smart Printer; 1700 pieces on roll; stretchable 5 - 5.2 mm; plain; snap-on type; orange

Item No.: 2009-145/000-005
Mini-WSB Inline; for Smart Printer; 1700 pieces on roll; stretchable 5 - 5.2 mm; plain; snap-on type; red

Item No.: 2009-145/000-024
Mini-WSB Inline; for Smart Printer; 1700 pieces on roll; stretchable 5 - 5.2 mm; plain; snap-on type; violet

Item No.: 2009-145
Mini-WSB Inline; for Smart Printer; 1700 pieces on roll; stretchable 5 - 5.2 mm; plain; snap-on type; white

Item No.: 2009-145/000-002
Mini-WSB Inline; for Smart Printer; 1700 pieces on roll; stretchable 5 - 5.2 mm; plain; snap-on type; yellow

Item No.: 248-501/000-006
Mini-WSB marking card; as card; not stretchable; plain; snap-on type; blue

Item No.: 248-501/000-007
Mini-WSB marking card; as card; not stretchable; plain; snap-on type; gray

Item No.: 248-501/000-023
Mini-WSB marking card; as card; not stretchable; plain; snap-on type; green

Item No.: 248-501/000-017
Mini-WSB marking card; as card; not stretchable; plain; snap-on type; light green

Downloaded from Arrow.com.

1.1.2.2 Marker

Item No.: 248-501/000-012
Mini-WSB marking card; as card; not stretchable; plain; snap-on type; orange

Item No.: 248-501/000-005
Mini-WSB marking card; as card; not stretchable; plain; snap-on type; red

Item No.: 248-501/000-024
Mini-WSB marking card; as card; not stretchable; plain; snap-on type; violet

Item No.: 248-501
Mini-WSB marking card; as card; not stretchable; plain; snap-on type; white

Item No.: 248-501/000-002
Mini-WSB marking card; as card; not stretchable; plain; snap-on type; yellow

1.1.2.3 Marker carrier

Item No.: 750-103
Group marker carrier

1.1.3 Shield termination

1.1.3.1 Shield clamping saddles

Item No.: 790-108
Shield clamping saddle; 11 mm wide; diameter of compatible conductor; 3 ... 8 mm

Item No.: 790-208
Shield clamping saddle; 12.4 mm wide; 3 ... 8 mm

Item No.: 790-116
Shield clamping saddle; 19 mm wide; diameter of compatible conductor; 7 ... 16 mm

Item No.: 790-216
Shield clamping saddle; 21.8 mm wide; 6 ... 16 mm

Item No.: 790-124
Shield clamping saddle; 27 mm wide; diameter of compatible conductor; 6 ... 24 mm

Item No.: 790-220
Shield clamping saddle; 30 mm wide; 6 ... 20 mm

Item No.: 790-140
Shield clamping saddle; diameter of compatible conductor

1.1.4 Supply module

1.1.4.1 Supply module

Item No.: 750-606
Power Supply; 24 VDC; Diagnostics; Intrinsically safe

Item No.: 750-625/000-001
Power Supply; 24 VDC; Intrinsically safe

Downloaded from Arrow.com.