PART NUMBER DATA							
CIRCUITS	PART NUMBER	ENGINEERING NUMBER	COLOR	A IN	mm	B IN	mm
2	391001902	M800-01-02-5	WHITE	.53	13.5	.315	8.00
3	391001903	M800-01-03-5	WHITE	.85	21.5	.630	16.00
4	391001904	M800-01-04-5	WHITE	1.16	29.5	.945	24.00
5	391001905	M800-01-05-5	WHITE	1.48	37.5	1.260	32.00
6	391001906	M800-01-06-5	WHITE	1.79	45.5	1.575	40.01
7	391001907	M800-01-07-5	WHITE	2.11	53.5	1.890	48.01
8	391001908	M800-01-08-5	WHITE	2.42	61.5	2.205	56.01
9	391001909	M800-01-09-5	WHITE	2.74	69.5	2.520	64.01
10	391001910	M800-01-10-5	WHITE	3.05	77.5	2.835	72.01
11	391001911	M800-01-11-5	WHITE	3.37	85.5	3.150	80.01
12	391001912	M800-01-12-5	WHITE	3.68	93.5	3.465	88.01

REF. LAST 2 DIGITS OF PART NUMBER EQUAL CIRCUIT COUNT

NOTE: IF THIS PRODUCT IS STORED IN AN ENVIRONMENT WITH A RELATIVE HUMIDITY OF LESS THAN 50%, MOISTURE MUST BE ADDED. REFER TO TECHNICAL ADVISORY AS 45499-001 FOR INSTRUCTIONS. (C)

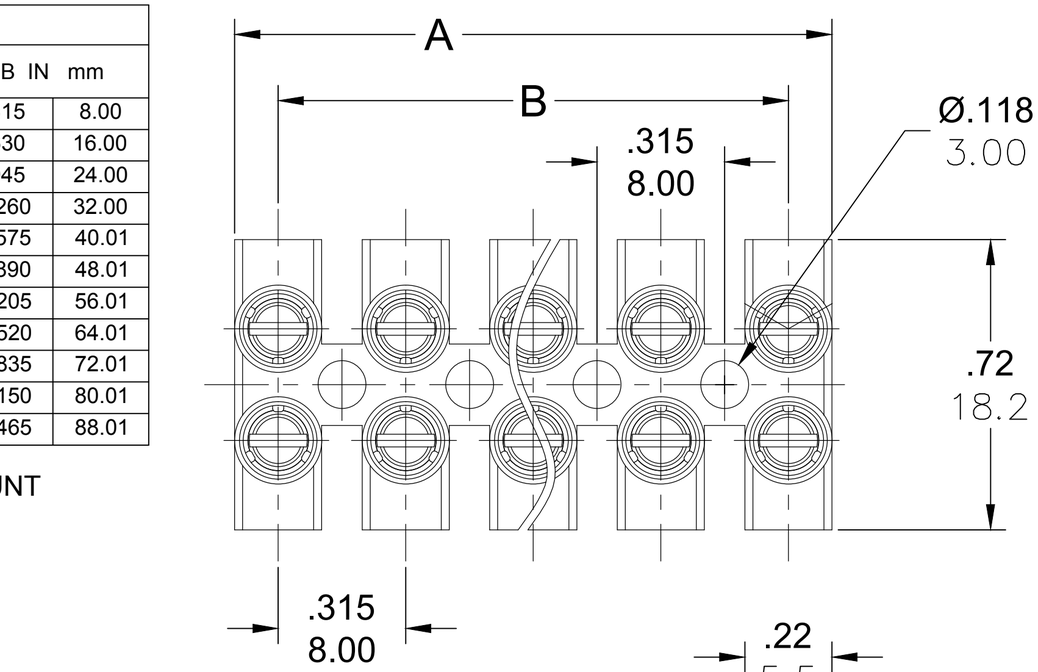

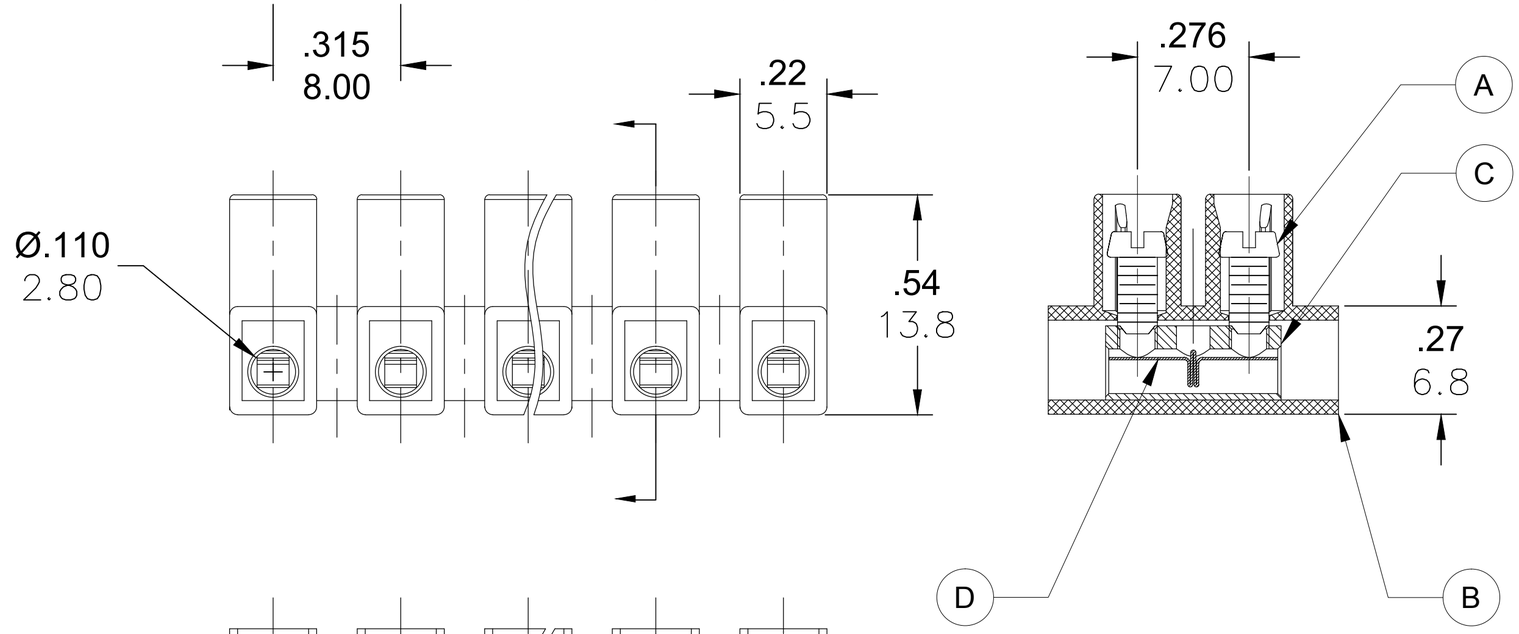

ENGINEERING NUMBER LEGEND

M800-01-XX-5

SERIES

PITCH=8.0MM

POLES

COLOR

CONTACT FACTORY FOR OPTIONAL COLORS

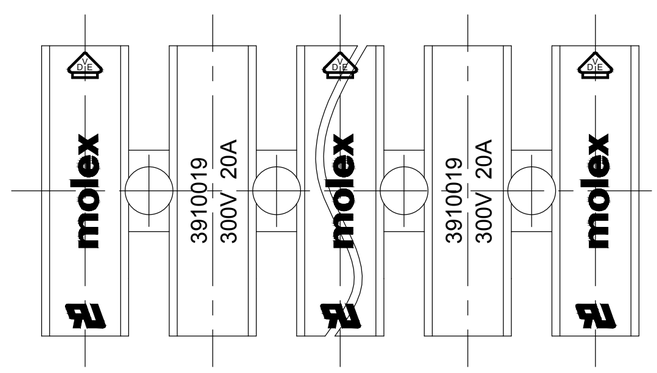

TOLERANCES			
MM	TOL	INCH	TOL
0-6	±0.25	0-.24	±.010
>6-30	±0.40	.24-1.18	±.016
>30-120	±0.50	1.18-4.76	±.020
>120	±0.80	>4.76	±.031

SPECIFICATIONS:

1. Material:
   (A) Screw: Steel, Zinc plated
   (B) Body: PA66 UL94 V-0
   (C) Cage: Brass, Nickel plated
   (D) Terminal: Stainless Steel
2. Rating: 300V, 20amps
3. Wire range: 22-12 AWG
4. Max torque: 4.4 in lbs.
5. Dielectric voltage withstand:DC 3000V for 1 minute.
6. Insulation resistance: DC 1000V,100GΩ
7. Rated Impulse Voltage:4000V, Plus and Minus 5 times each
8. Strip Length: .20 in. (5.0mm)
9. Operating Temperature: -40° C to +105° C
10. Contact Resistance: < 3 mΩ
11. All dims. shown are for reference only

REV	DESCRIPTION
C1	REVISED DOC TOL EC NO: IPG2017-0881 4/5/17 DRWN: ABENJAMI ---- CH'KD: ---- 2014/07/21 APPR: BRUPERT

QUALITY SYMBOL: ▼=0, (C)=0

GENERAL TOLERANCES (UNLESS SPECIFIED)	mm	INCH
4 PLACES	±---	±---
3 PLACES	±---	±---
2 PLACES	±---	±---
1 PLACE	±---	±---
ANGULAR ±---°		

DRAFT WHERE APPLICABLE MUST REMAIN WITHIN DIMENSIONS

DIMENSION STYLE: IN/MM

SCALE: ---

DESIGN UNITS: METRIC

THIRD ANGLE PROJECTION

DRAWN BY: RSTONE DATE: 2014/07/08

CHECKED BY: G FARNSW DATE: ----

APPROVED BY: JFMURPHY DATE: 2014/07/21

TITLE: TERMINAL STRIP 8.0MM LOW PROFILE 300V ----

MOLEX INCORPORATED

MATERIAL NO.: SEE CHART

DOCUMENT NO.: SD-39100-012

SHEET NO.: 1 0F 1

SIZE: C

THIS DRAWING CONTAINS INFORMATION THAT IS PROPRIETARY TO MOLEX INCORPORATED AND SHOULD NOT BE USED WITHOUT WRITTEN PERMISSION

Downloaded from Arrow.com.