SERIES: P78A-1000 | DESCRIPTION: DC-DC CONVERTER

FEATURES

- up to 1 A current output
- pin compatible with LM78XX linear regulators
- non-isolated switching regulator
- wide input voltage range
- efficiency up to 91%
- low ripple and noise
- short circuit protection
- ultra-compact SIP3 package
- low profile
- -40°C to +85°C temperature range

RoHS

MODEL

MODEL	input voltage typ (Vdc)	input voltage range (Vdc)	output voltage (Vdc)	output current max (mA)	output power max (W)	ripple & noise[1] max (mVp-p)	efficiency[2] typ (%)
P78A03-1000	24	7~28	3.3	1000	3.3	120	87
P78A05-1000	24	8~28	5	1000	5	120	91

Notes:
1. At full load, nominal input, 20 MHz bandwidth oscilloscope, output terminated with a 0.1 μF multilayer low ESR ceramic capacitor.
2. At min Vin.
3. All specifications measured at: Ta=25°C, nominal input voltage, rated output load, and after warm up unless otherwise specified.

PART NUMBER KEY

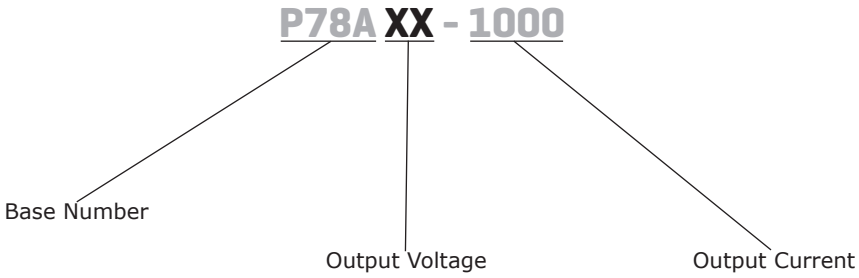

Please read our datasheet & drawing disclaimer here.
Downloaded from Arrow.com.

INPUT

parameter	conditions/description	min	typ	max	units
operating input voltage	3.3 Vdc model 5 Vdc model	7 8	24 24	28 28	Vdc Vdc
no load input current	Vin = 24 Vdc		1.5		mA

OUTPUT

parameter	conditions/description	min	typ	max	units
maximum capacitive load[1]				220	µF
line regulation	measured from low to high line, full load			±1	%
load regulation	measured from 10~100% load, typical Vin			±1.5	%
voltage accuracy			±3	±5	%
switching frequency	Vin = 12 Vdc		330		kHz

Note: 1. Maximum capacitive load is tested at nominal input voltage and full load.

PROTECTIONS

parameter	conditions/description	min	typ	max	units
over current protection	output shut down, auto recovery			200	%
short circuit protection	output shut down, auto recovery				

SAFETY AND COMPLIANCE

parameter	conditions/description	min	typ	max	units
MTBF	as per MIL-HDBK-217F, full load, 25 °C	3,875,000			hours
RoHS	yes				

ENVIRONMENTAL

parameter	conditions/description	min	typ	max	units
operating temperature	see derating curve	-40		85	°C
storage temperature		-55		125	°C
operating humidity	non-condensing			95	%

SOLDERABILITY

parameter	conditions/description	min	typ	max	units
wave soldering	see wave solder profile			260	°C

Note: 2. The wave solder profile is measured on lead temperature.
3. Need to keep the solder parts internal temperature less than about 210°C.

WAVE SOLDERING PROFILE
(Lead-free)

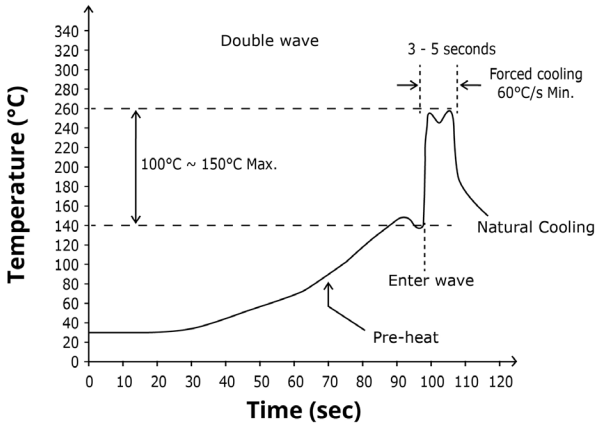

Downloaded from Arrow.com.

MECHANICAL

parameter	conditions/description	min	typ	max	units
dimensions	11.6 x 8.5 x 10.4				mm
case material	non-conductive black plastic (UL94V-0)				
potting material	epoxy (UL94V-0)				
weight			2		g

MECHANICAL DRAWING

units: mm
tolerance: XX.X=±0.50 mm
XX.XX=±0.25 mm

PIN CONNECTIONS	
PIN	Function
1	+Vin
2	GND
3	+Vout

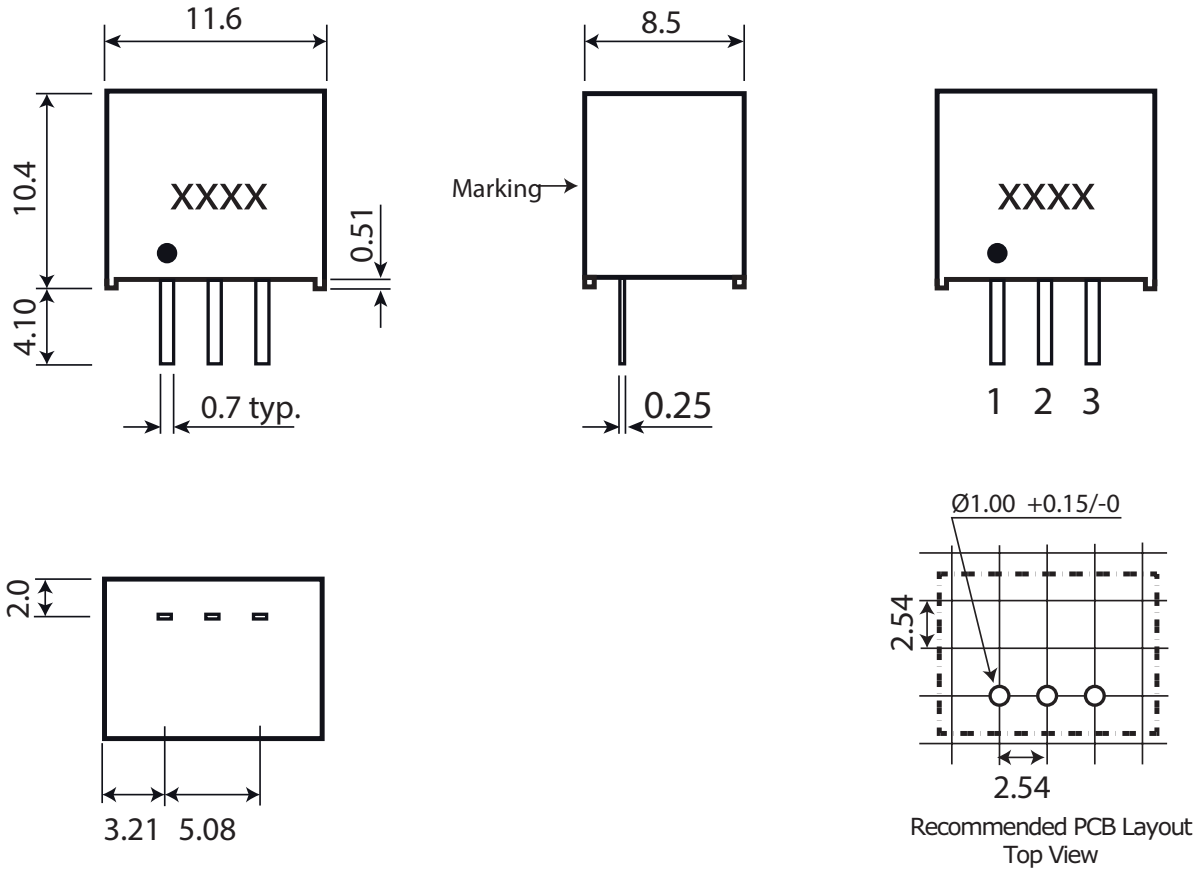

Downloaded from Arrow.com.

DERATING CURVE

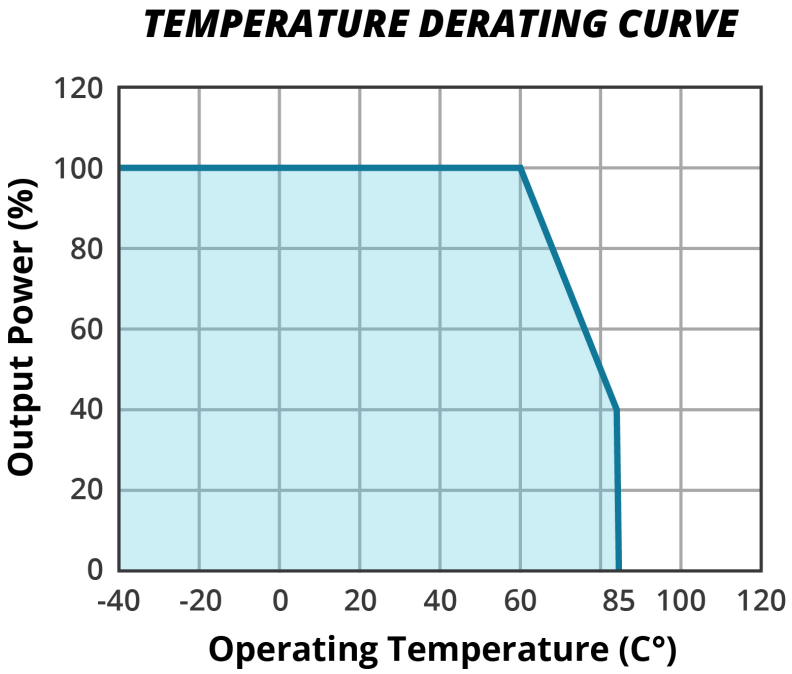

EFFICIENCY CURVES

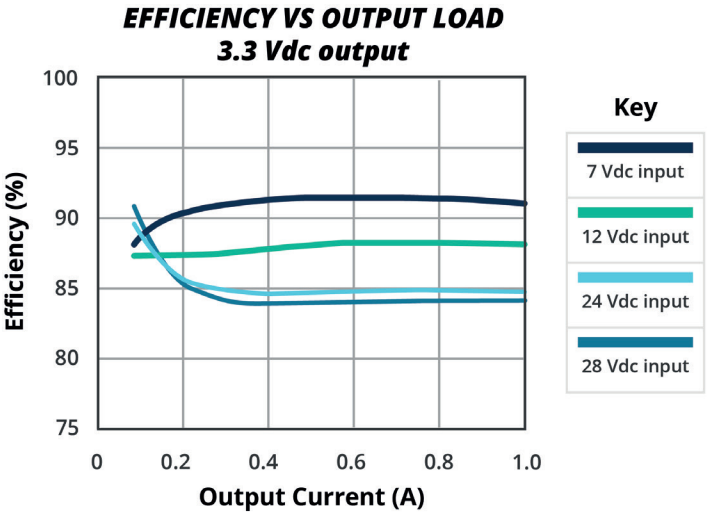

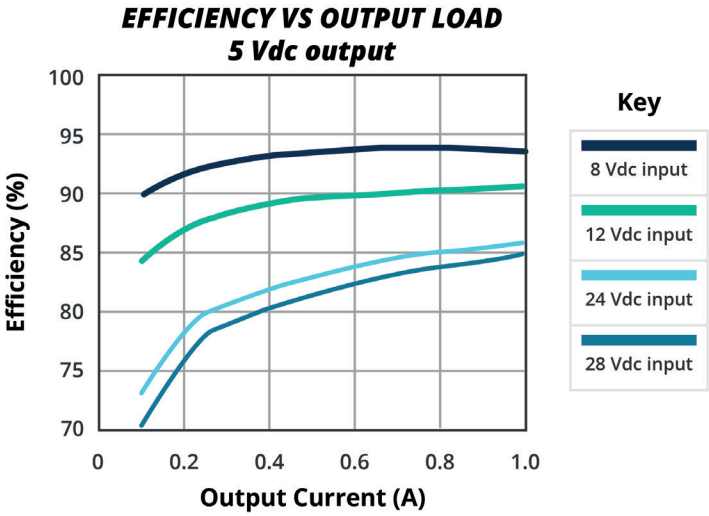

Downloaded from Arrow.com.

APPLICATION CIRCUIT

Figure 1

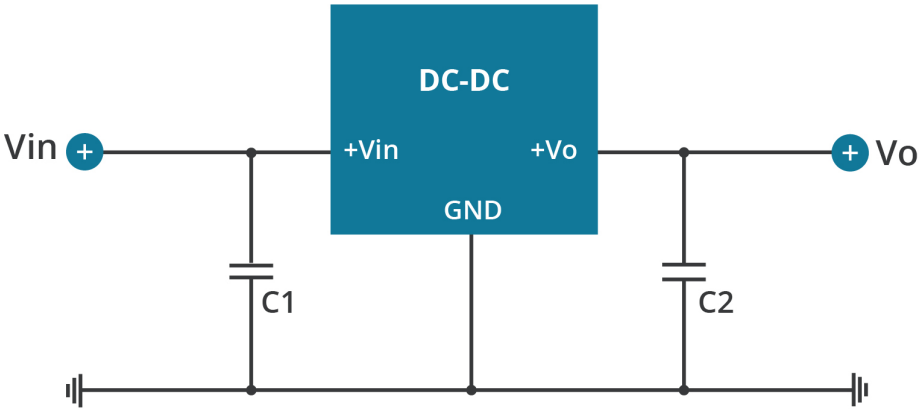

Table 1

Optional External Components	
C1	10µF MLCC
C2	10µF MLCC

Notes: 1. To protect the converter during power-up, use soft start power supply.
2. The converter cannot be used as a positive to negative converter.

PACKAGING

units: mm

Tube Size: 520 x 16.5 x 9.3 mm
QTY: 42 pcs

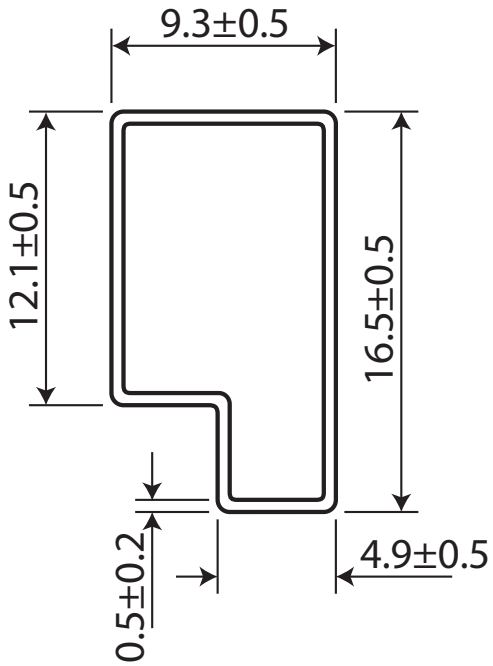

Downloaded from Arrow.com.

REVISION HISTORY

rev.	description	date
1.0	initial release	05/16/2016
1.01	company logo updated	04/14/2021
1.02	derating curve, efficiency curves and application circuit updated	09/21/2021
1.03	datasheet updated	05/29/2025

The revision history provided is for informational purposes only and is believed to be accurate.

CUI INC
a bel group

15575 SW Sequoia Pkwy #100
Portland, OR 97224
800.275.4899

Fax 503.612.2383
Belfuse.com
powersupport@belf.com

CUI offers a two (2) year limited warranty. Complete warranty information is listed on our website.

CUI reserves the right to make changes to the product at any time without notice. Information provided by CUI is believed to be accurate and reliable. However, no responsibility is assumed by CUI for its use, nor for any infringements of patents or other rights of third parties which may result from its use.

CUI products are not authorized or warranted for use as critical components in equipment that requires an extremely high level of reliability. A critical component is any component of a life support device or system whose failure to perform can be reasonably expected to cause the failure of the life support device or system, or to affect its safety or effectiveness.

Downloaded from Arrow.com.