PRODUCT NUMBER: 8330-0-00-15-00-00-38-0

www.mill-max.com
DATA SHEET

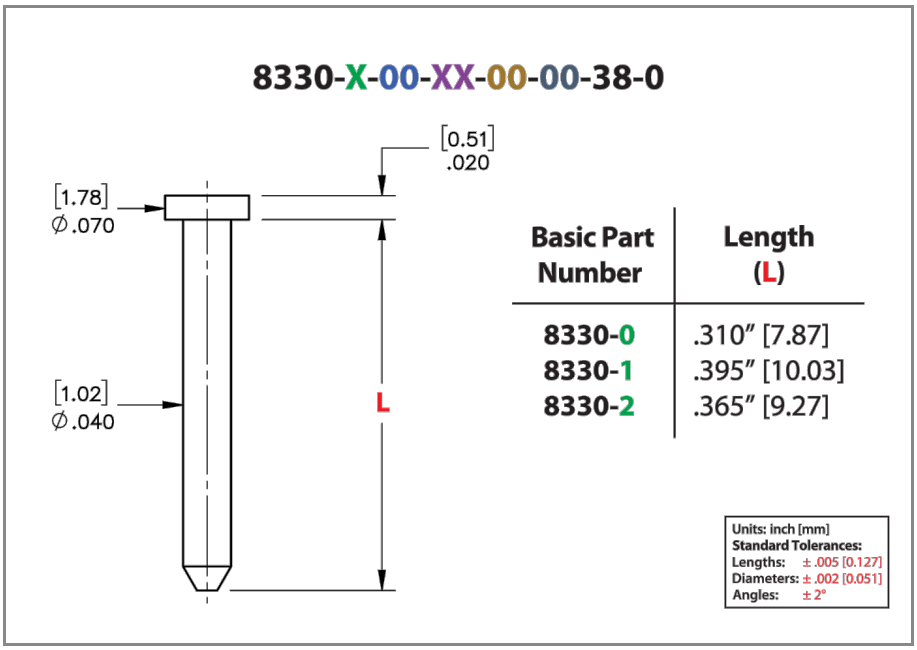



General Information	
1 **Product Lifecycle:**	Active
Product Family:	Printed Circuit Board (PCB) Pin
2 **Description:**	Nail Head Pin
3 **Shell Material:**	Brass Alloy
4 **Shell Plating:**	15 : 10 µ" Gold over Nickel
5 **Operating Temperature Range:**	- 55/+125° C
Country of Origin:	USA
6 **ROHS:**	Yes

Termination Style	
Tail:	Single
Tail Type:	SolderTail
Head Type:	Flat Face

Downloaded from Arrow.com.

8330-0-00-15-00-00-38-0 - SPECIFICATIONS

Key Dimensions	
Body Diameter:	.040" (1,016mm)
Body Length:	.310" (7,874mm)
Flange Diameter:	.070" (1,778mm)
Flange Length:	.020" (0,508mm)
Head Diameter:	.070" (1,778mm)
Overall Length:	.330" (8,382mm)
Tail Diameter:	.040" (1,016mm)
Tail Length:	.310" (7,874mm)

Electrical Specifications		
7	**Maximum Current:**	Application Specific

Mounting Specifications		
8	**Mounting Feature:**	Through-Hole Solder Mount
	Mounting Hole Type:	Plated Through Hole (PTH)
	Mounting Hole:	.044" (1,118mm)

Packaging Information	
Packaging:	00 - Packaged in Bulk

Environmental & Export Classifications	
REACH Status:	REACH Unaffected
ECCN:	Contact Factory
HTSUS:	8536.90.4000
Cage Code:	3N087
Moisture Sensitivity Level (MSL):	1 (Unlimited)
Special Handling Code:	UNDF
Prop 65:	N
Static Sensitive:	N

Downloaded from Arrow.com.

NOTES:

1. Part is Active and in Production, No Scheduled Obsolescence
2. Standard Tolerances:
   Lengths +/-.005" (0,13)
   Diameters: +/-.002" (0,051)
   Angles: +/- 2°
3. Brass Alloy 360 per ASTM B 16, or 385 per ASTM B455
4. GOLD per ASTM B 488, Type 1 (99.7% min. gold), Code C (130-200 HK {Knoop hardness}), NICKEL per ASTM B 689, Type 2 (Bright)
5. Per IEC 60512-11-(4,-9,-10,-12)
6. Mill-Max products labeled with the RoHS symbol are compliant with all three ROHS Directives. All of our products previously described as RoHS (2002/95/EC) and RoHS-2 (2011/65/EC) are also compliant with RoHS-3 (2015/863/EU).
7. Current Rating is typically a measured function of the female socket/connector. The amount of current a solid, male pin can tolerate is a direct relation of the heat displaced based on current and the ability of neighboring components to handle displaced heat.
8. For through-hole solder mounting of this part, the suggestion is to make the finished hole size, at its minimum, .004" larger than the diameter being soldered into the mounting hole.

ADDITIONAL PARTS, PACKAGING & ASSEMBLY INFO

8330-0-57 Tape & Reel Details

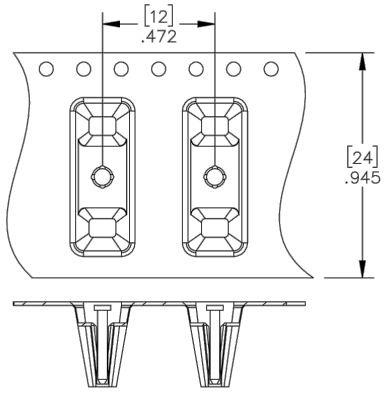

ADDITIONAL NOTES AND SPECIFICATIONS

In the interest of improved design, quality and performance , Mill-Max reserves the right to make changes in its specifications without prior notice. Specifications and tolerances are provided wherever possible. The tolerance on dimensions of critical to function features is typically held tighter than the stated standard tolerances, such as press-fits, holes and lengths affecting the coplanarity of SMT products. Due to the wide variety of interconnects Mill-Max offers, the specific tolerances vary from product to product. If you need information regarding the tolerance of a particular part, please contact Technical Services.

Downloaded from Arrow.com.

RELATED LINKS AND DOCUMENTS

- Product Detail: 8330-0-00-15-00-00-38-0 - Nail Head Pin
- Engineering Notebook: **Introduction to Printed Circuit Board PCB Pins**
- Environmental Compliance: https://www.mill-max.com/rohs

Downloaded from Arrow.com.