DYNAMIC SPEAKER

Product No. 139379

BMS2415-11C-08H04RW065J

Issue no. BS/TES01.2014

Features:

- RoHS

BESTAR Holdings Co., Ltd.

www.be-star.com | info@be-star.com

Downloaded from Arrow.com.

Content:

1 Characteristics 3
1.1 Technical terms 3
1.2 Test method 4
1.3 Frequency Response Curve 5
1.4 Total Harmonic Distortion 6
2 Dimension 7
3 Reliability Test 8
4 Packing 9
4.1 packing drawing 10
4.2 Packing quantity 10
5 History change record 10
6 Important Notice 11

Downloaded from Arrow.com.

1.Characteristics

1.1Technical terms

1. Size	24*15*4.3mm
2. Impedance at 2KHz	8±15%Ω
3. Lowest Resonance frequency	900±20%Hz
4. Rated input power	1.0W
5. Maximum input power	1.5W
6. Buzz & Rattle(at sine wave 2.83V)	must be normal between 300-3500Hz
7. SPL	87±3dB (at 800,1.0K,1.2K,1.5KHz in 0.1W/0.1m average (0dB SPL=20μPa))
8. THD	≤5% (at 2KHz/0.1W/0.1m)
9. Operating temperature	-20...+60℃
10. Storage temperature	-30...+70℃

Downloaded from Arrow.com.

1.2 Test method:

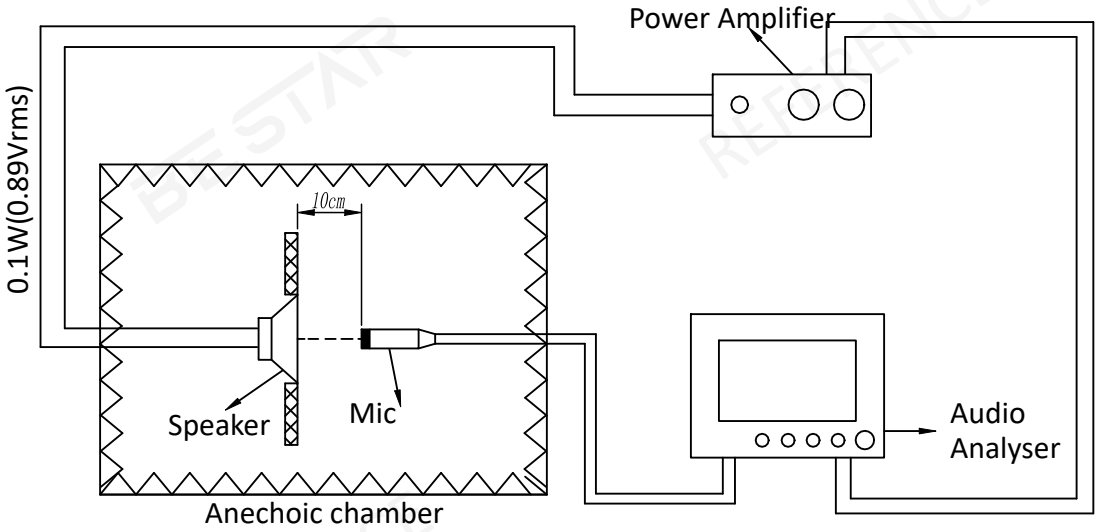

Downloaded from Arrow.com.

1.3 Frequency Response Curve (only for reference)

A: Frequency Response Magn 0 dB re 20.00 µPa/V 1/12Oct

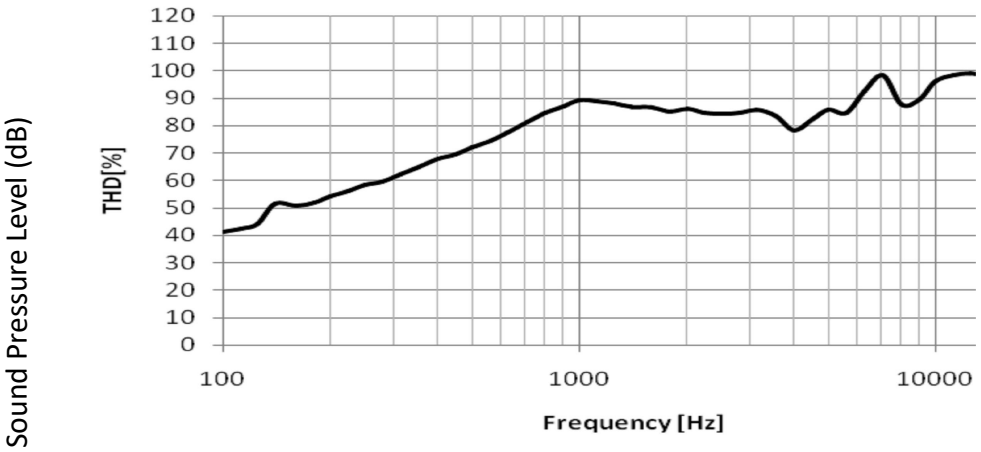

Frequency (Hz)

1.3.1 Sensitivity

SPL is expressed in dB rel 20 µPa,computed according to IEC 268-5.
Measurement set up according chapter 1.2 and parameters according chapter 1.3

Downloaded from Arrow.com.

1.4 Total Harmonic Distortion (only for reference)

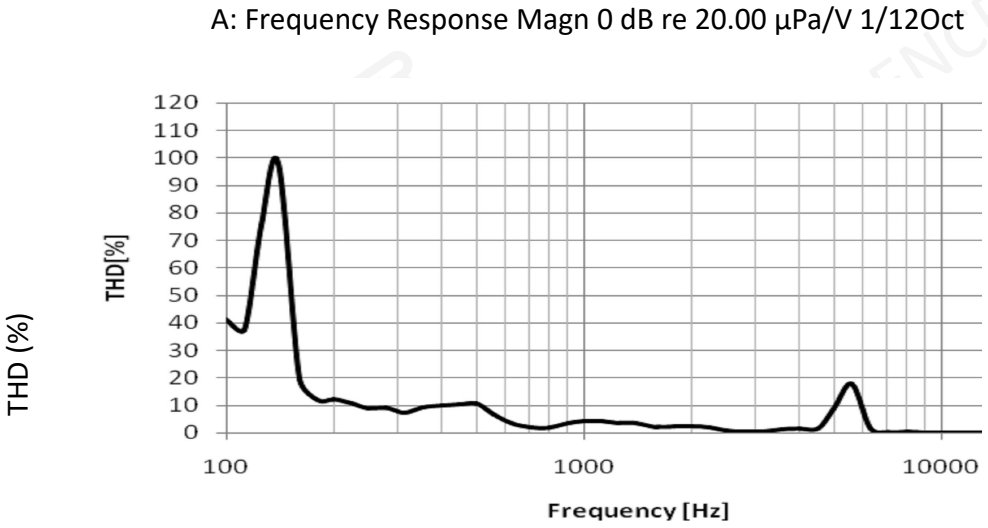

Frequency (Hz)

1.4.1 THD

THD is measured according test set up in chapter 1.2 and parameters according chapter 1.4

Downloaded from Arrow.com.

2. Dimension

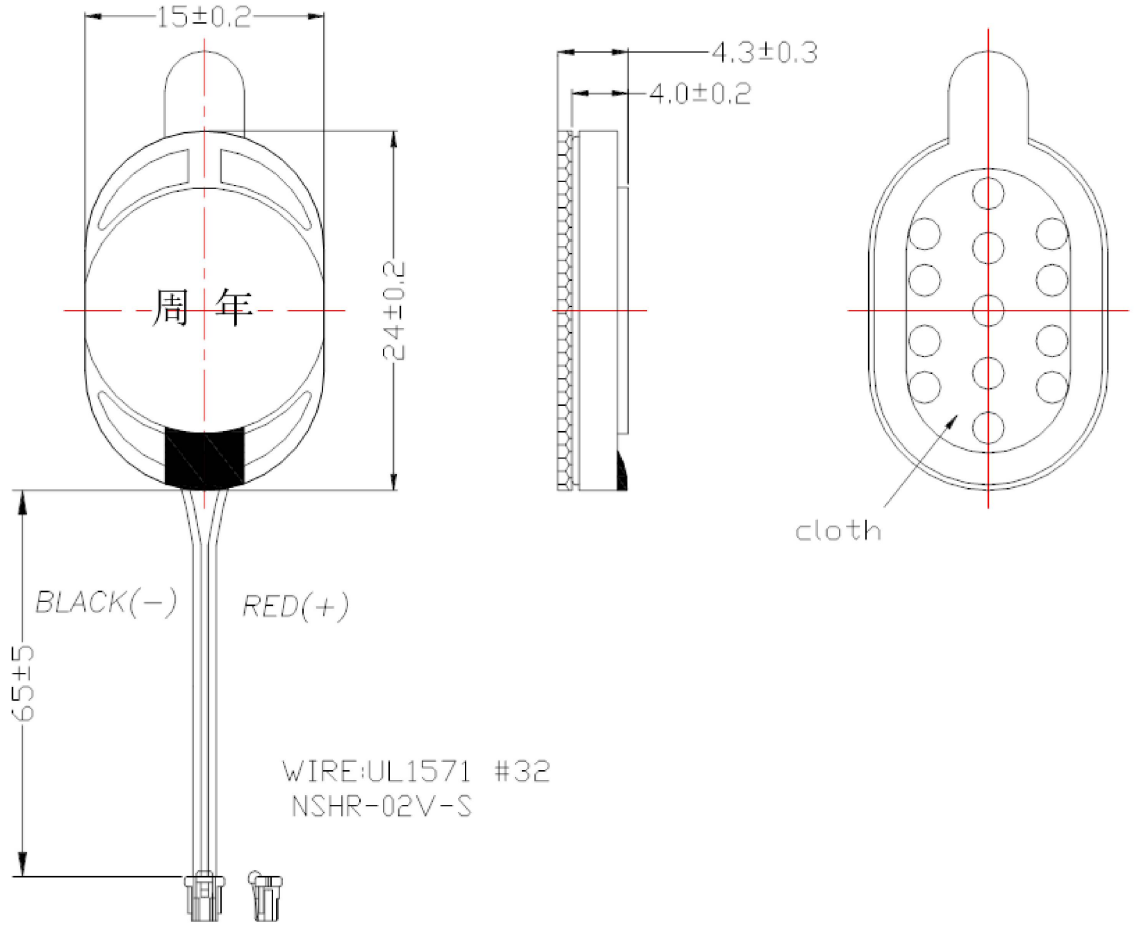

Tolerance:±0.5mm

Downloaded from Arrow.com.

3. Reliability test

3.1High temperature preservation test

Temperature	+70 ℃
Duration	96hrs

3.2 Low temperature preservation test

Temperature	-30 ℃
Duration	96hrs

3.3 Humidity Test

Temperature	+30±3 ℃
Relative Humidity	90%-95%RH
Duration	96hrs

3.4 Thernal Humidity Cycling

The part shall be subjected 5 cycles.

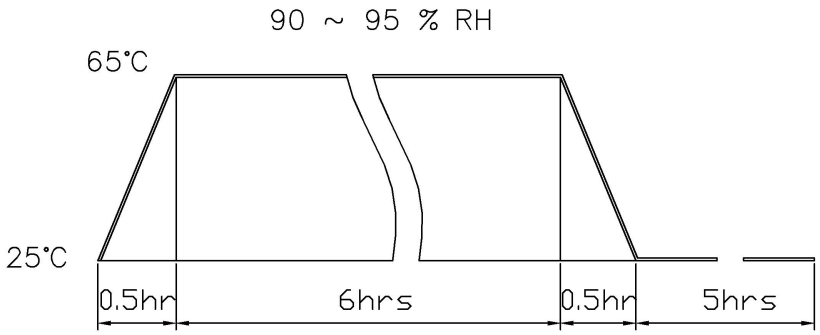

3.6 Drop test

Drop the speaker contained in normal box onto the surface of 40mm thick board 10 times from the height of 75cm

3.7 Operation Life Test

Must perform normal with program White-Noise source at Rated Power for 96 Hours.

Downloaded from Arrow.com.

4. Packing

4.1 Packing drawing (unit:cm)

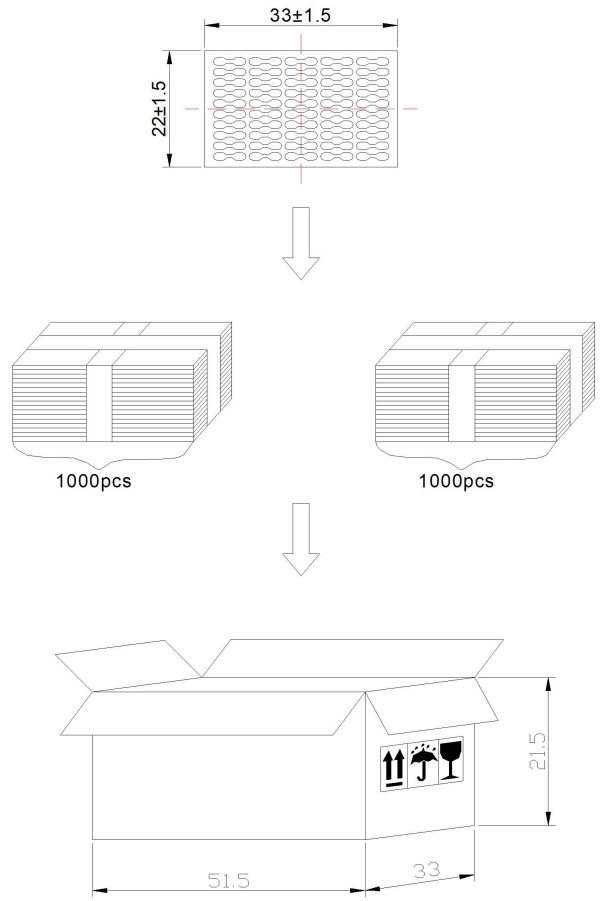

4.2 Packing quantity

1) 100pcs per tray
2) 20 trays per carton
3) 2000pcs per carton
3. carton size:51.5X33X21.5cm

Downloaded from Arrow.com.

5. History change record

Version	Change Items	Date	Drawn	Checked	Approved
A0	First Edition	2021.03.25	Judy.Yang	Peter.Huang	Jason.Zhang

REFERENCE BESTAR

Downloaded from Arrow.com.

6.Important Notice

6.1 The products mustn't be washed

6.2 Store Condition（packaging）

The products should be stored in the room ,where the temperature/humidity is stable. And avoid suchplaces where there are large temperature changes. Please store the products at the following conditions:

Temperature: -10 to + 40℃ Humidity: 15 to 85% R.H.

6.3 Expire Date on Storage

Expire date (Shelf life) of the products is six months after deliveried under the conditions of a sealed and an unopened package. Please use the products within six months after deliveried.

If you store the products for a long time (more than six months), use carefully because the products may be degraded in the solderability and/or rusty.Please confirm solderability and characteristics for the products regularly.

6.4 Notice on Product Storage

(1) Please do not store the products in a chemical atmosphere (Acids, Alkali, Bases, Organic gas, Sulfides and so on), because the characteristics may be reduced at quality, and/or be degraded in the solderability due to the storage in a chemical atmosphere.

(2) Please use the products immediately after the package is opened, because the characteristics may be reduced at quality, and/or be degraded in the solderability due to storage under the poor condition.

6.5 Rated and Max input power

Rated input power

Rated input power is the maximum (limit) value which can be input to the component intentionally. If the actual input power to component keeps exceeding Rated Input power, it will damage the component acoustic performances and reliability. In the worst case, the component will get broken and no sound.

Max input power

Max input power is the maximum (limit) value for unexpected input power which is caused in the customer's circuit like surge voltage. If the actual input power to component keeps exceeding Maximum input power, it will break the component and cause no sound in a short time. Please note that component will have a risk to get broken if the unexpected input power continues.

The value of input power is set based on the sinusoidal power in the normal speaker use. If the special signal is input to component, the values of Rated and Max input power will be different. Please make a well-investigation at your laboratory in the case of the special signal input.

Downloaded from Arrow.com.