MICRO SWITCH
FREEPORT ILLINOIS, U.S.A.
A DIVISION OF HONEYWELL
FED. MFG. CODE 91929

SWITCH-BASIC

CATALOG LISTING
4HS143-120

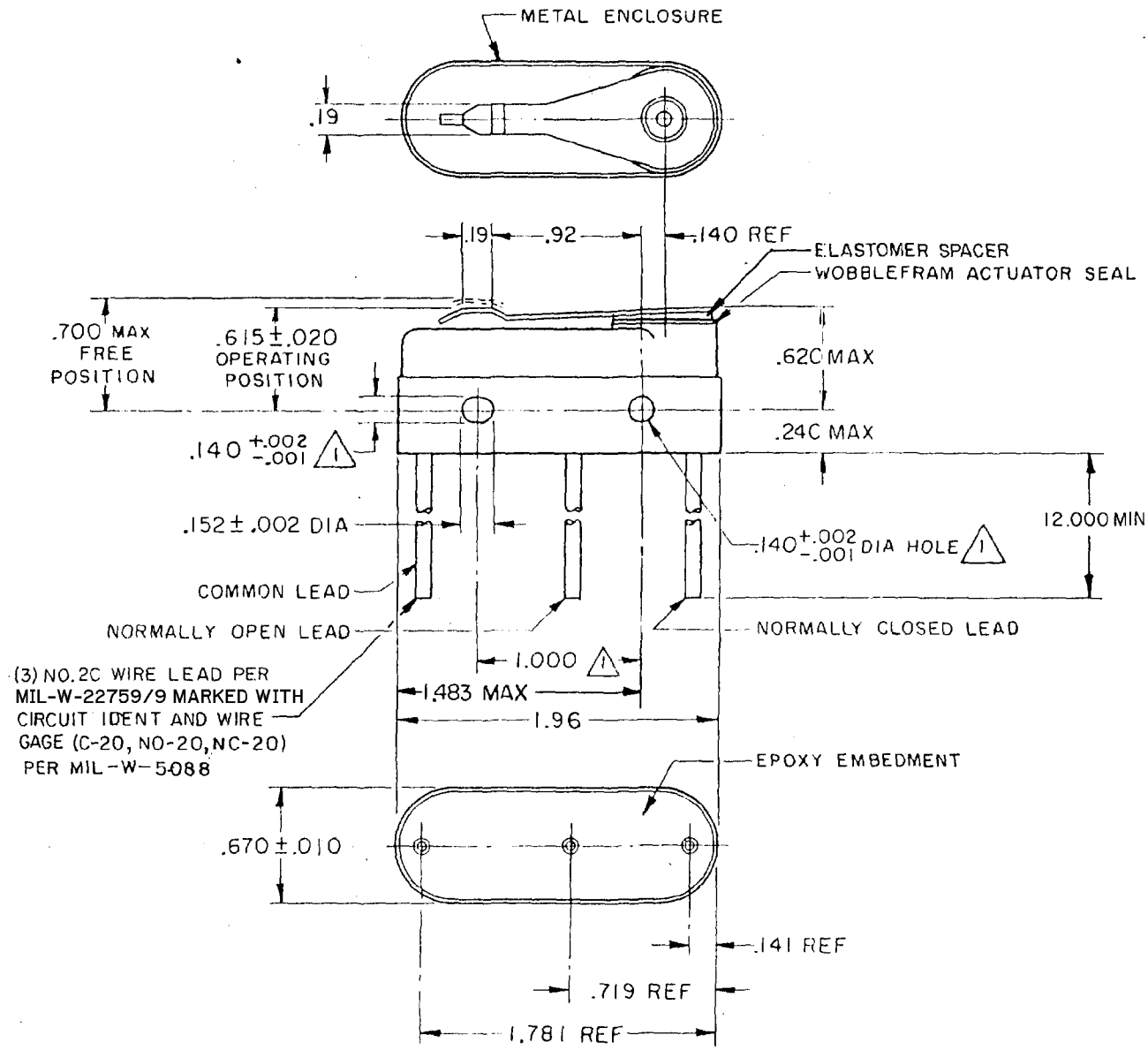

NOTE —

(1) MOUNTING HOLES WILL ACCEPT PINS OR SCREWS OF .139 MAX DIA ON 1.000±.002 CENTERS

2- FOR USE IN AMBIENT TEMPERATURE RANGE FROM -65° TO +250° F

(3) WEIGHT OF SWITCH ONLY IS 1.5 OZ MAX WEIGHT OF CONDUCTOR GROUP ONLY IS 0.3 OZ MAX PER FOOT

THIS DRAWING COVERS A PROPRIETARY ITEM AND IS THE PROPERTY OF MICRO SWITCH, A DIVISION OF HONEYWELL. THIS DRAWING IS NOT TO BE COPIED OR USED WITHOUT THE APPROVAL OF MICRO SWITCH.

CHARACTERISTICS

OPERATING FORCE	15-35 OZ
RELEASE FORCE	4 OZ MIN
PRETRAVEL	.085 MAX
DIFFERENTIAL TRAVEL	.020 MAX
OVERTRAVEL	.010 MIN

ELECTRICAL DATA

CONTACT ARRANGEMENT
S P D T

LINE VOLTAGE	INDUCTIVE LOAD	RESISTIVE LOAD
28 VDC	8 AMP	10 AMP
125 VAC	1 AMP	.5 AMP

SCALE: FULL

DO NOT SCALE PRINT

TOLERANCES
APPLY TO DESIGN UNITS. CONVERSIONS ARE ONLY FOR REFERENCE. UNLESS NOTED. TOLERANCES ARE ±

	DIM. mm	TOL. mm/in	DIM. in	TOL. mm/in
NO PLACES	X	1/.04	X.X	0.8/.03
ONE PLACES	X.X	0.4/.016	X.XX	0.38/.015
TWO PLACES	X.XX	0.15/.006	X.XXX	0.13/.005
THREE PLACES				
ANGLES				

DESIGN UNITS SI METRIC ☐ US CUSTOMARY ■

WEIGHT (3)

4HS143-120
PAGE 1 OF 1
M
DRAWING NUMBER
ISSUE 13
REPLACES
RELEASE NO. PR-8841

REVISIONS
A CO-94122 TSM 17 MAR 99
B 0004792 TCC/AP 15 APR 04

FO-52848-A
FORMTEK

DRAWN CJH 5 JUN 80
CHECKED GLH 5 JUNE 80

Downloaded from Arrow.com.