Current-compensated Chokes - Nanocrystalline Core





- Performance nanocrystalline core material
- AC and DC applications
- Low magnetic leakage flux
- Excellent winding insulation
- Broad range of inductance ratings
- RV8**1**41 - horizontal orientation
- RV8**5**41 - vertical orientation

Performance indicators

standard	high	very high
	RV8x40	RV8x41

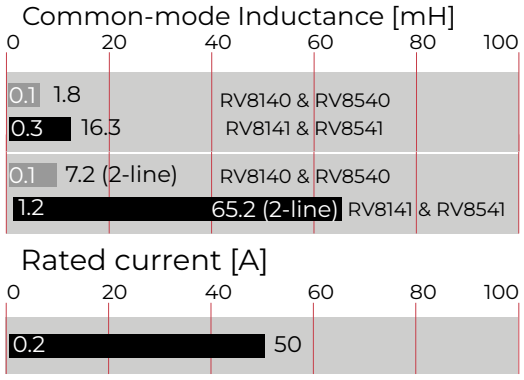

Technical Specifications

Rated currents	16 to 50 A @ 60°C
Operating frequency	50/60 Hz DC
Creepage and clearance distances	Creepage: ≥ 7.2 mm (Coil - Coil) Clearance: ≥ 5.6 mm (Coil - Coil)
High potential test voltage	3 kV AC 2s coil to coil
Rated inductance	0.3 to 16.3 mH (4-line or parallel connection) 1.2 to 65.2 mH (2-line, series connection)
Operating voltage	530 VAC RMS 1000 VDC
Overvoltage category	530 VAC: III (acc. IEC 60664-1) 1000 VDC: II (acc. IEC 60664-1)
Pollution degree	PD2 (acc. IEC60664-1)
Stray inductance	Max. 1% of rated inductance @ 10 kHz
Temperature range (operation and storage)	-40°C to +125°C
Climatic category	40/125/56 (acc. IEC 60068-1)
Cooling	AN
Altitude	2000 m, current and voltage derating above
Protection category	IP 00 (acc. IEC 60529-1)
Flammability corresponding to	UL 94 V0
Vibration and shock	Vibration (IEC 60068-2-6): 10 Hz to 55 Hz (24 cycles) Shock (IEC 60068-2-27): 30 G / 18 ms (3 cycles)
Design corresponding to	IEC 60938-1/-2 UL 1446 E332676 - Insulation system SCH-155(F)-C
MTBF (Mil-HB-217F)	>2,000,000 h @ 60°C/530 V

Approvals & Compliances

RoHS

Features and Benefits

EV wallbox chargers up to 35kW

- On the grid side, the 4-line choke can be installed as 3 phases and neutral
- On the vehicle side of the charger (DC charging), 2 windings of the choke are connected in series or parallel
- Complies with choke-related requirements in IEC/EN 61851-1: Electric vehicle conductive charging system, IEC/EN 61851-21-2 (AC charging) & IEC/EN 61851-23: (DC charging)
- Complies with choke-related requirements in UL 2202 Electric Vehicle (EV) Charging System Equipment

Horizontal Version - Four Performance Choices

- S01 Standard
- S03 Standard Plus- increased height
- S11 Small
- S13 Small - increased height

Vertical Version - Four Performance Choices

- S02 Standard
- S06 Standard, thin - reduced core height
- S12 Small
- S16 Small, thin- reduced core height

Also available with ferrite cores: RV8140 (horizontal) & RV8540 (vertical)

Typical Applications

- EV charging: (AC & DC charging stations)
- General applications

Typical electrical schematic

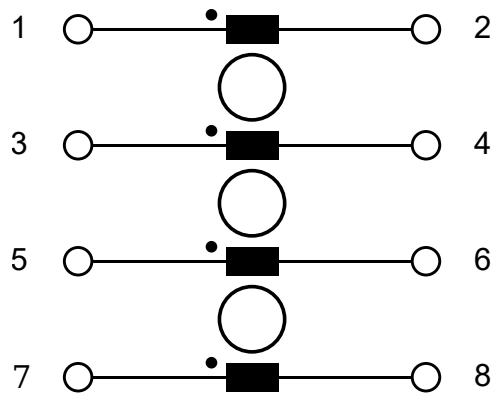

Downloaded from Arrow.com.

Choke Selection Table

Designation	Orientation	Rated Current	Frame Size	Inductance*	Inductance*	Resistance*	Weight
		@ 60°C		10kHz	100kHz		
		[A]		[mH]	[mH]	[mOhm]	[kg]
RV8141-16-S01	Horizontal	16	1	11.18	1.61	6.5	0.27
RV8141-16-S03	Horizontal	16	3	16.30	2.35	8.1	0.37
RV8141-16-S11	Horizontal	16	11	7.73	1.12	6.5	0.20
RV8141-16-S13	Horizontal	16	13	11.60	1.64	8	0.27
RV8141-25-S01	Horizontal	25	1	6.29	0.91	3	0.28
RV8141-25-S03	Horizontal	25	3	9.17	1.32	3.7	0.39
RV8141-25-S11	Horizontal	25	11	3.95	0.57	2.7	0.21
RV8141-25-S13	Horizontal	25	13	5.92	0.84	3.3	0.28
RV8141-32-S01	Horizontal	32	1	4.37	0.63	2.1	0.28
RV8141-32-S03	Horizontal	32	3	6.37	0.92	2.7	0.39
RV8141-32-S11	Horizontal	32	11	2.52	0.36	1.8	0.21
RV8141-32-S13	Horizontal	32	13	3.79	0.53	2.2	0.28
RV8141-40-S01	Horizontal	40	1	2.80	0.40	1.3	0.28
RV8141-40-S03	Horizontal	40	3	4.08	0.59	1.5	0.40
RV8141-40-S11	Horizontal	40	11	1.42	0.21	1.1	0.21
RV8141-40-S13	Horizontal	40	13	2.13	0.30	1.3	0.28
RV8141-50-S01	Horizontal	50	1	1.57	0.23	0.9	0.28
RV8141-50-S03	Horizontal	50	3	2.29	0.33	1.1	0.38
RV8141-50-S11	Horizontal	50	11	0.63	0.09	0.7	0.19
RV8141-50-S13	Horizontal	50	13	0.95	0.13	0.9	0.27
RV8541-16-S02	Vertical	16	2	11.18	1.61	6.9	0.29
RV8541-16-S06	Vertical	16	6	5.59	0.81	5.3	0.17
RV8541-16-S12	Vertical	16	12	7.73	1.12	6.9	0.21
RV8541-16-S16	Vertical	16	16	3.87	0.56	5.6	0.12
RV8541-25-S02	Vertical	25	2	6.29	0.91	3.2	0.30
RV8541-25-S06	Vertical	25	6	3.14	0.45	2.6	0.19
RV8541-25-S12	Vertical	25	12	3.95	0.57	3	0.22
RV8541-25-S16	Vertical	25	16	1.97	0.29	2.4	0.14
RV8541-32-S02	Vertical	32	2	4.37	0.63	2.3	0.30
RV8541-32-S06	Vertical	32	6	2.18	0.32	1.8	0.19
RV8541-32-S12	Vertical	32	12	2.52	0.36	2.1	0.22
RV8541-32-S16	Vertical	32	16	1.26	0.18	1.7	0.14
RV8541-40-S02	Vertical	40	2	2.80	0.40	1.4	0.31
RV8541-40-S06	Vertical	40	6	1.40	0.20	1.2	0.20
RV8541-40-S12	Vertical	40	12	1.42	0.21	1.3	0.22
RV8541-40-S16	Vertical	40	16	0.71	0.10	1.1	0.14
RV8541-50-S02	Vertical	50	2	1.57	0.23	1	0.30
RV8541-50-S06	Vertical	50	6	0.79	0.11	0.9	0.19
RV8541-50-S12	Vertical	50	12	0.63	0.09	0.9	0.21
RV8541-50-S16	Vertical	50	16	0.32	0.05	0.8	0.14

* **2-line applications:**
Series connection: Connect 2-3 and 6-7. => Inductance values multiply by 4, resistance doubles.
Parallel connection: Connect 1-3, 2-4, 5-7 and 6-8. => Inductance values remain the same, resistance halves.
See mechanical drawing for pin-out guidance.

Inductance test conditions: 10 kHz / 50 mV; 100 kHz / 1 V; tolerances +50%, -30%

Downloaded from Arrow.com.

Product selector

RV8t4x-yy-Szz

zz: Frame Size

01: Frame size standard	ø 66 x 41 mm, horizontal
02: Frame size standard	64 x 42 x 66 mm, vertical
03: Frame size standard plus	ø 66 x 53 mm, horizontal
06: Frame size standard thin	64 x 30 x 66 mm, vertical
11: Frame size small	ø 62 x 37 mm, horizontal
12: Frame size small	60 x 38x 60 mm, vertical
13: Frame size small plus	ø 62 x 47 mm, horizontal
16: Frame size small thin	60 x 27 x 60 mm, vertical

yy: Current
16 A to 50 A

x: Core material
0: Ferrite core
1: Nanocrystalline core

t: Orientation
1: Horizontal
5: Vertical

Distribution Inventory

Up-to-date inventory levels for global distributors is available at

https://products.schaffner.com/stock

Thermal Derating

If higher ambient temperatures than the specified 60°C apply, the nominal current needs to be reduced according to the graph below.

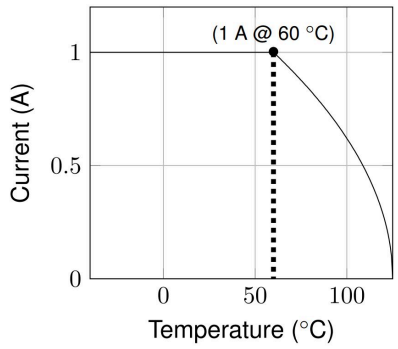

Normalized current value

$$I = I_N \cdot \sqrt{\frac{\Theta_{max} - \Theta_{act}}{\Theta_{max} - \Theta_N}}$$

for $\Theta_{act} > \Theta_N$ and $\Theta_{act} < \Theta_{max}$

I_N	rated current at Θ_N
Θ_{act}	actual ambient temperature
Θ_N	temperature at which the rated current is defined
Θ_{max}	rated maximum temperature of the component

Downloaded from Arrow.com.

Typical Choke Attenuation / Resonance Frequency Characteristics

Per CISPR 17: symmetrical 50 Ω/50 Ω -> Differential Mode (DM); asymmetrical 50 Ω/50 Ω -> Common Mode (CM)
4-line or parallel connection

16 A

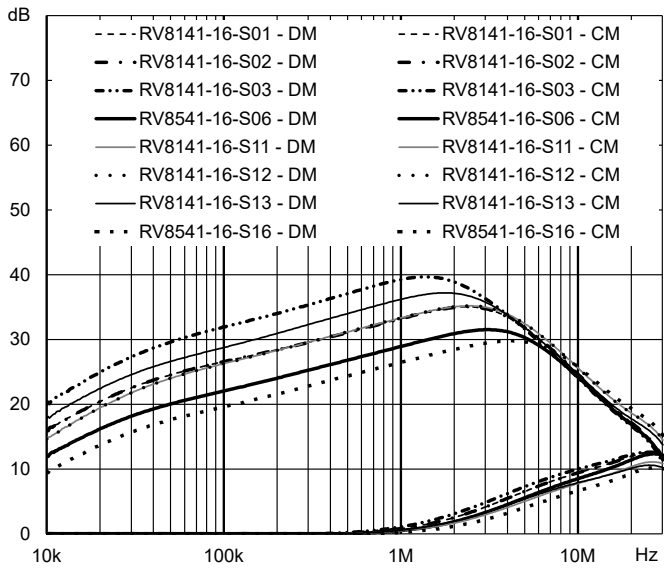

25 A

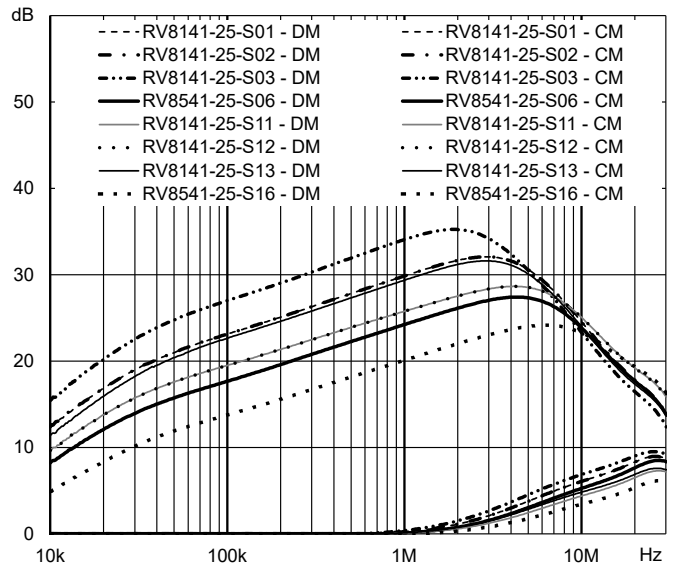

32 A

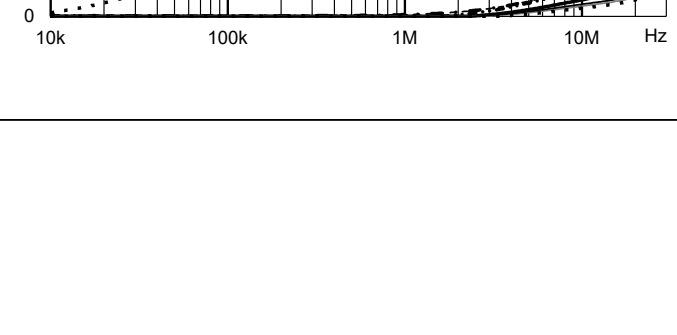

40 A

50 A

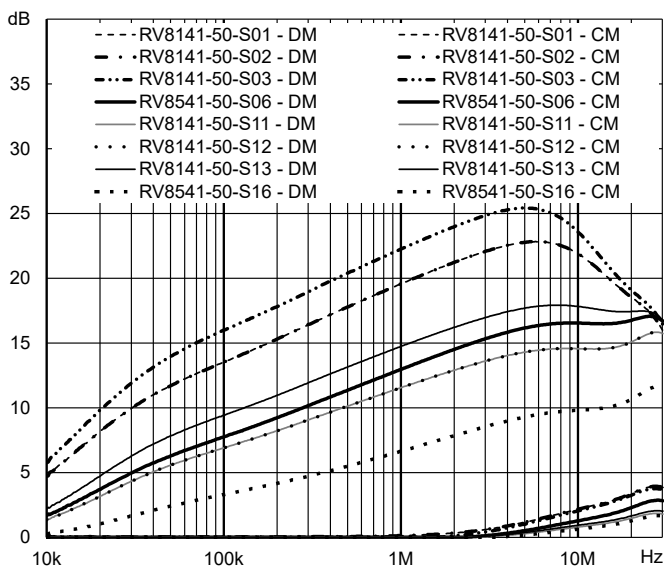

Downloaded from Arrow.com.

Typical Choke Attenuation / Resonance Frequency Characteristics - 2 Line Application

Per CISPR 17: symmetrical 50 Ω/50 Ω -> Differential Mode (DM); asymmetrical 50 Ω/50 Ω -> Common Mode (CM)
For 2-line / series connection

16 A (2-line application)

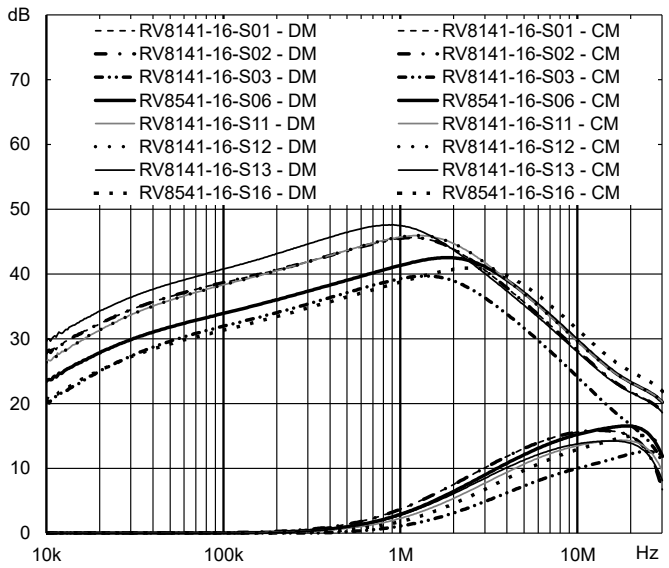

25 A (2-line application)

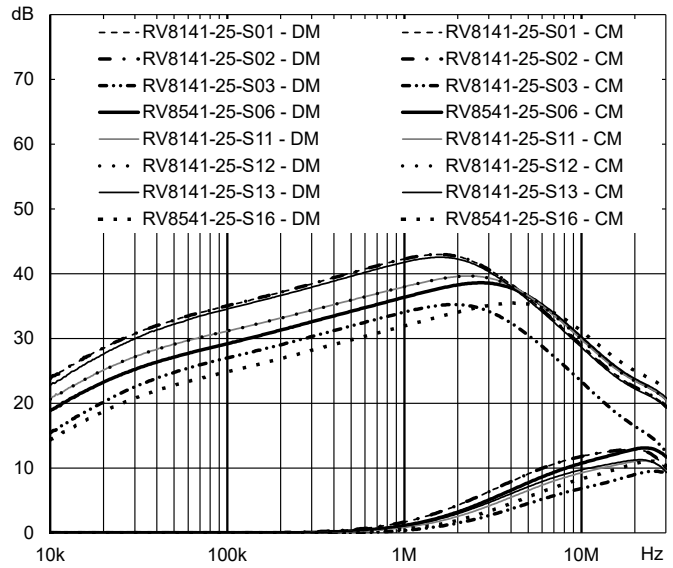

32 A (2-line application)

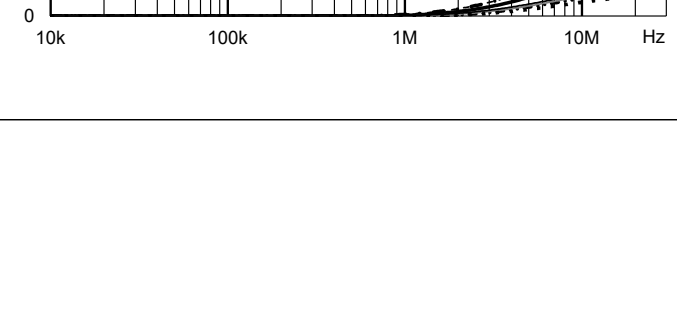

40 A (2-line application)

50 A (2-line application)

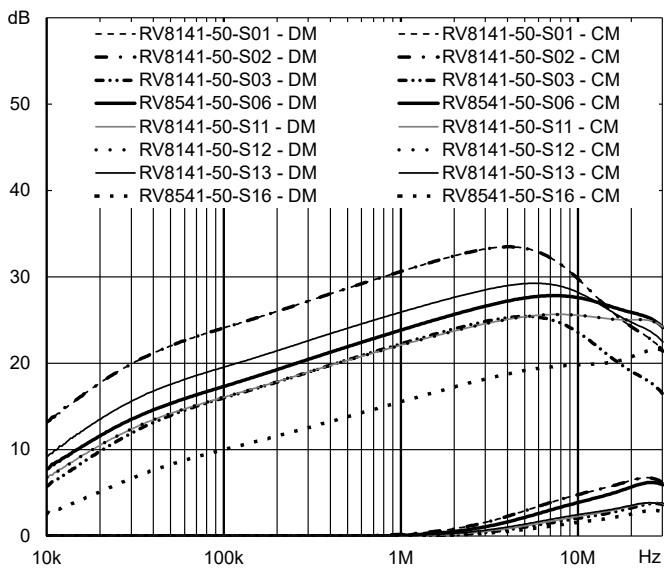

Downloaded from Arrow.com.

Mechanical Data

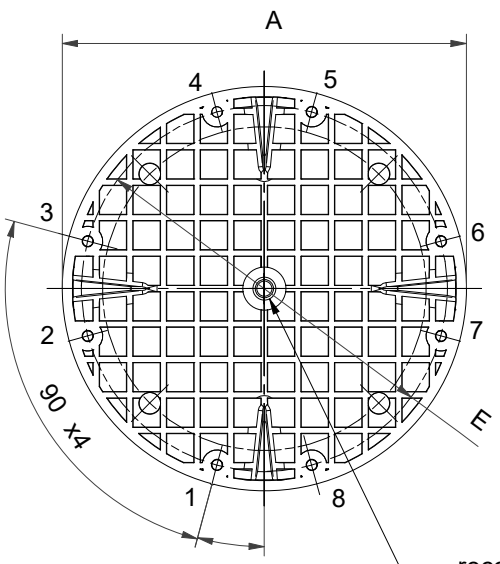

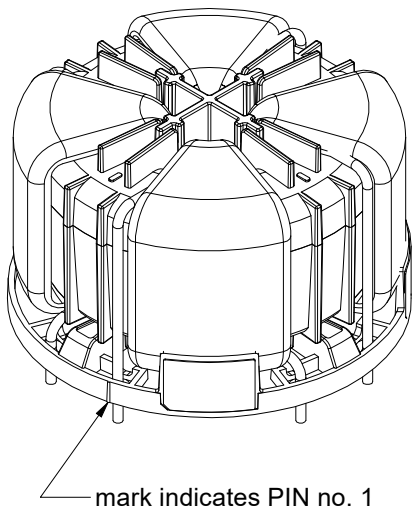

recommendad screw for fixation:
WN 1452 K35 x 8
tightening torque 1.0 Nm

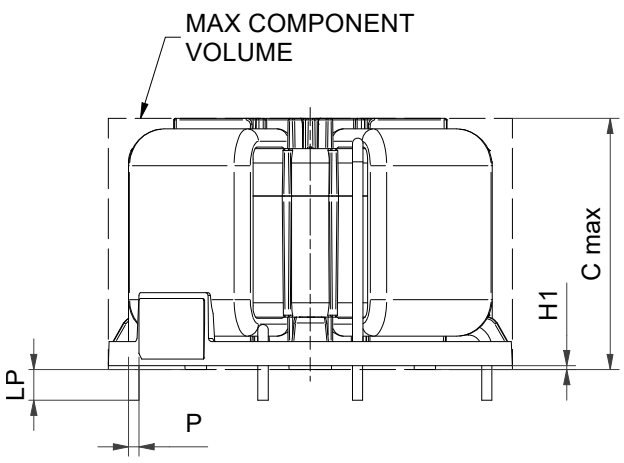

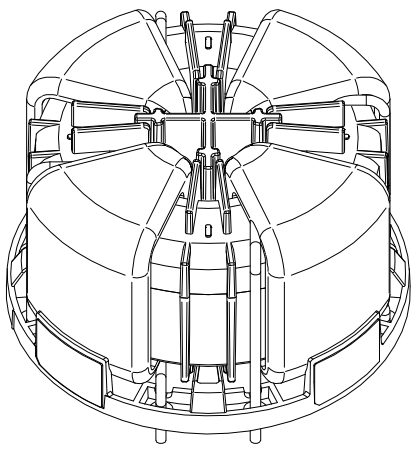

	Ø A ±0.2	Cmax	H1 ±0.1	Ø E ±0.2	α ±1°	LP ±0.5	Ø P (16A) ±0.1	Ø P (25A) ±0.1	Ø P (32A) ±0.1	Ø P (40A) ±0.1	Ø P (50A) ±0.1
RV8140/RV8141-XX-S01	66.1	41.1	0.6	59.8	15°	5	1.7	2.2	2.2	2.8	2.8
RV8140/RV8141-XX-S03	66.1	53.2	0.6	59.8	15°	5	1.7	2.2	2.2	2.8	2.8
RV8140/RV8141-XX-S11	62.1	37.1	0.6	55.4	15°	5	1.5	2.0	2.0	2.5	2.5
RV8140/RV8141-XX-S13	62.1	47.1	0.6	55.4	15°	5	1.5	2.0	2.0	2.5	2.5

Downloaded from Arrow.com.

Mechanical Data

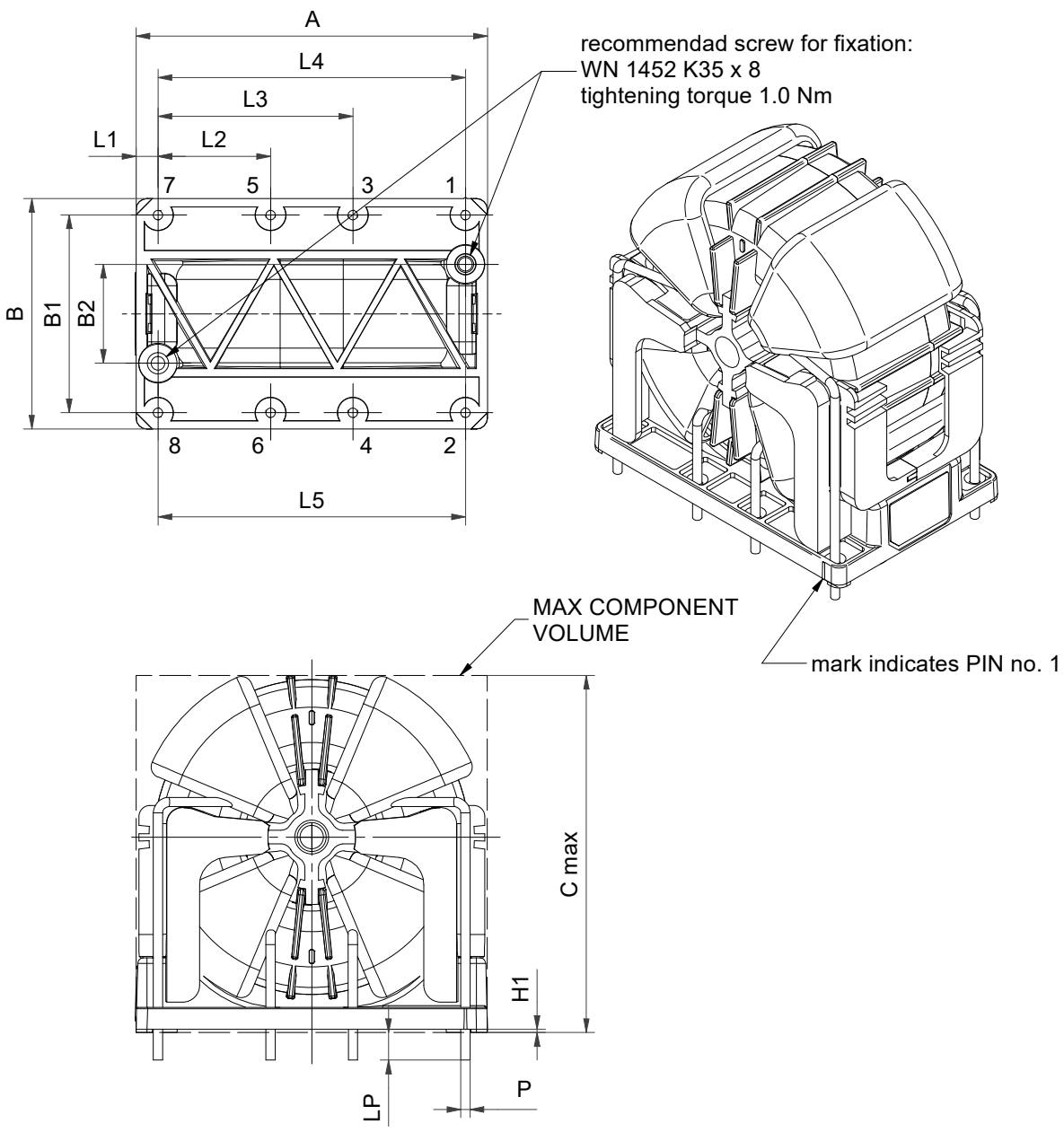

	Cmax	H1	B	B1	B2	A	L1	L2	L3	L4	L5	LP	Ø P (16A)	Ø P (25A)	Ø P (32A)	Ø P (40A)	Ø P (50A)
		±0.1	±0.2	±0.4	±0.2	±0.2	±0.1	±0.4	±0.4	±0.4	±0.4	±0.5	±0.1	±0.1	±0.1	±0.1	±0.1
RV8540/RV8541-XX-S02	65.5	0.6	42	36	18	64	4	20.5	35.5	56	56	5	1.7	2.2	2.2	2.8	2.8
RV8540/RV8541-XX-S06	65.5	0.6	30	24	0	64	4	20.5	35.5	56	46	5	1.7	2.2	2.2	2.8	2.8
RV8540/RV8541-XX-S12	59.7	0.6	38	32	12	60	4	18.5	33.5	52	46	5	1.5	2.0	2.0	2.5	2.5
RV8540/RV8541-XX-S16	59.7	0.6	27	21	0	60	4	18.5	33.5	52	42	5	1.5	2.0	2.0	2.5	2.5

Downloaded from Arrow.com.

We are here to help



Read more insights from TE's experts:

Schaffner is now part of TE Connectivity →

Learn more about Corcom products →

Connect With Us

We make it easier to connect with our experts and are ready to provide the support you need.
Visit **te.com/support** to chat with a Product Information Specialist.

Contact a TE expert today →

te.com

©2025 TE Connectivity plc. All Rights Reserved.

TE Connectivity, TE, TE connectivity (logo), and EVERY CONNECTION COUNTS, ECOsine, Schaffner are trademarks owned or licensed by TE Connectivity plc. family of companies. All other logos, products and/or company names referred to herein might be trademarks of their respective owners.

While TE has made every reasonable effort to ensure the accuracy of the information in this document, TE does not guarantee that it is error-free, nor does TE make any other representation, warranty or guarantee that the information is accurate, correct, reliable or current. TE reserves the right to make any changes to the information contained herein without prior notice. TE Connectivity assumes only those obligations set forth in the terms and conditions for this product and shall in no event be liable for any incidental, indirect, or consequential damages arising out of the sale, resale, use, or misapplication of the product. TE expressly disclaims any implied warranties with respect to the information contained herein, including, but not limited to, implied warranties of merchantability or fitness for a particular purpose. Dimensions, specifications and/or information contained herein are for reference purposes only and are subject to change without notice. Consult TE for the latest dimensions, specifications and/or information. Users of TE Connectivity products must make their own assessment as to whether the respective product is suitable for the respective desired application.

ED 01/25

schaffner MORE POWER TO YOU is now part of TE connectivity

Downloaded from Arrow.com.