FAIRCHILD™

**Is Now Part of**

ON

**ON Semiconductor®**

**To learn more about ON Semiconductor, please visit our website at**
**www.onsemi.com**

Please note: As part of the Fairchild Semiconductor integration, some of the Fairchild orderable part numbers will need to change in order to meet ON Semiconductor's system requirements. Since the ON Semiconductor product management systems do not have the ability to manage part nomenclature that utilizes an underscore (_), the underscore (_) in the Fairchild part numbers will be changed to a dash (-). This document may contain device numbers with an underscore (_). Please check the ON Semiconductor website to verify the updated device numbers. The most current and up-to-date ordering information can be found at www.onsemi.com. Please email any questions regarding the system integration to Fairchild_questions@onsemi.com.

ON Semiconductor and the ON Semiconductor logo are trademarks of Semiconductor Components Industries, LLC dba ON Semiconductor or its subsidiaries in the United States and/or other countries. ON Semiconductor owns the rights to a number of patents, trademarks, copyrights, trade secrets, and other intellectual property. A listing of ON Semiconductor's product/patent coverage may be accessed at www.onsemi.com/site/pdf/Patent-Marking.pdf. ON Semiconductor reserves the right to make changes without further notice to any products herein. ON Semiconductor makes no warranty, representation or guarantee regarding the suitability of its products for any particular purpose, nor does ON Semiconductor assume any liability arising out of the application or use of any product or circuit, and specifically disclaims any and all liability, including without limitation special, consequential or incidental damages. Buyer is responsible for its products and applications using ON Semiconductor products, including compliance with all laws, regulations and safety requirements or standards, regardless of any support or applications information provided by ON Semiconductor. "Typical" parameters which may be provided in ON Semiconductor data sheets and/or specifications can and do vary in different applications and actual performance may vary over time. All operating parameters, including "Typicals" must be validated for each customer application by customer's technical experts. ON Semiconductor does not convey any license under its patent rights nor the rights of others. ON Semiconductor products are not designed, intended, or authorized for use as a critical component in life support systems or any FDA Class 3 medical devices or medical devices with a same or similar classification in a foreign jurisdiction or any devices intended for implantation in the human body. Should Buyer purchase or use ON Semiconductor products for any such unintended or unauthorized application, Buyer shall indemnify and hold ON Semiconductor and its officers, employees, subsidiaries, affiliates, and distributors harmless against all claims, costs, damages, and expenses, and reasonable attorney fees arising out of, directly or indirectly, any claim of personal injury or death associated with such unintended or unauthorized use, even if such claim alleges that ON Semiconductor was negligent regarding the design or manufacture of the part. ON Semiconductor is an Equal Opportunity/Affirmative Action Employer. This literature is subject to all applicable copyright laws and is not for resale in any manner.

Downloaded from Arrow.com.

FAIRCHILD SEMICONDUCTOR®

November 2013

# FDP15N40

## N-Channel UniFET™ MOSFET

**400 V, 15 A, 300 mΩ**

## Features

- $R_{DS(on)}$ = 240 mΩ (Typ.) @ $V_{GS}$ = 10 V, $I_D$ = 7.5 A
- Low Gate Charge (Typ. 28 nC)
- Low $C_{rss}$ (Typ. 17 pF)
- 100% Avalanche Tested
- Improved dv/dt Capability
- RoHS Compliant

## Applications

- Lighting
- Uninterruptible Power Supply

## Description

UniFET™ MOSFET is Fairchild Semiconductor's high voltage MOSFET family based on planar stripe and DMOS technology. This MOSFET is tailored to reduce on-state resistance, and to provide better switching performance and higher avalanche energy strength. This device family is suitable for switching power converter applications such as power factor correction (PFC), flat panel display (FPD) TV power, ATX and electronic lamp ballasts.

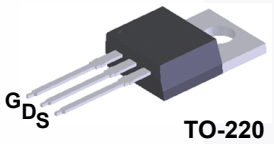


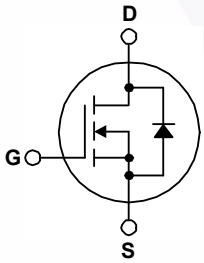


## MOSFET Maximum Ratings $T_C$ = 25°C unless otherwise noted.

| Symbol | Parameter | | | FDP15N40 | Unit |
|---|---|---|---|---|---|
| $V_{DSS}$ | Drain to Source Voltage | | | 400 | V |
| $V_{GSS}$ | Gate to Source Voltage | | | ±30 | V |
| $I_D$ | Drain Current | - Continuous ($T_C$ = 25°C) | | 15 | A |
| | | - Continuous ($T_C$ = 100°C) | | 9 | |
| $I_{DM}$ | Drain Current | - Pulsed | (Note 1) | 60 | A |
| $E_{AS}$ | Single Pulsed Avalanche Energy | | (Note 2) | 731 | mJ |
| $I_{AR}$ | Avalanche Current | | (Note 1) | 15 | A |
| $E_{AR}$ | Repetitive Avalanche Energy | | (Note 1) | 17 | mJ |
| dv/dt | Peak Diode Recovery dv/dt | | (Note 3) | 15 | V/ns |
| $P_D$ | Power Dissipation | ($T_C$ = 25°C) | | 170 | W |
| | | - Derate Above 25°C | | 1.45 | W/°C |
| $T_J$, $T_{STG}$ | Operating and Storage Temperature Range | | | -55 to +150 | °C |
| $T_L$ | Maximum Lead Temperature for Soldering, 1/8" from Case for 5 Seconds | | | 300 | °C |

## Thermal Characteristics

| Symbol | Parameter | FDP15N40 | Unit |
|---|---|---|---|
| $R_{\theta JC}$ | Thermal Resistance, Junction to Case, Max. | 0.7 | °C/W |
| $R_{\theta JA}$ | Thermal Resistance, Junction to Ambient, Max. | 62.5 | |



Downloaded from Arrow.com.

## Package Marking and Ordering Information

| Part Number | Top Mark | Package | Packing Method | Reel Size | Tape Width | Quantity |
|---|---|---|---|---|---|---|
| FDP15N40 | FDP15N40 | TO-220 | Tube | N/A | N/A | 50 units |

## Electrical Characteristics $T_C$ = 25°C unless otherwise noted.

| Symbol | Parameter | Test Conditions | Min. | Typ. | Max. | Unit |
|---|---|---|---|---|---|---|
| **Off Characteristics** | | | | | | |
| $BV_{DSS}$ | Drain to Source Breakdown Voltage | $I_D$ = 250 µA, $V_{GS}$ = 0 V, $T_J$ = 25°C | 400 | - | - | V |
| $\Delta BV_{DSS}$ / $\Delta T_J$ | Breakdown Voltage Temperature Coefficient | $I_D$ = 250 µA, Referenced to 25°C | - | 0.5 | - | V/°C |
| $I_{DSS}$ | Zero Gate Voltage Drain Current | $V_{DS}$ = 400 V, $V_{GS}$ = 0 V | - | - | 1 | µA |
| | | $V_{DS}$ = 320 V, $T_C$ = 125°C | - | - | 10 | |
| $I_{GSS}$ | Gate to Body Leakage Current | $V_{GS}$ = ±30 V, $V_{DS}$ = 0 V | - | - | ±100 | nA |
| **On Characteristics** | | | | | | |
| $V_{GS(th)}$ | Gate Threshold Voltage | $V_{GS}$ = $V_{DS}$, $I_D$ = 250 µA | 3.0 | - | 5.0 | V |
| $R_{DS(on)}$ | Static Drain to Source On Resistance | $V_{GS}$ = 10 V, $I_D$ = 7.5 A | - | 0.24 | 0.3 | Ω |
| $g_{FS}$ | Forward Transconductance | $V_{DS}$ = 20 V, $I_D$ = 7.5 A | - | 15.3 | - | S |
| **Dynamic Characteristics** | | | | | | |
| $C_{iss}$ | Input Capacitance | $V_{DS}$ = 25 V, $V_{GS}$ = 0 V, f = 1 MHz | - | 1310 | 1750 | pF |
| $C_{oss}$ | Output Capacitance | | - | 210 | 280 | pF |
| $C_{rss}$ | Reverse Transfer Capacitance | | - | 17 | 25 | pF |
| $Q_{g(tot)}$ | Total Gate Charge at 10V | $V_{DS}$ = 320 V, $I_D$ = 15 A, $V_{GS}$ = 10 V (Note 4) | - | 28 | 36 | nC |
| $Q_{gs}$ | Gate to Source Gate Charge | | - | 8 | - | nC |
| $Q_{gd}$ | Gate to Drain “Miller” Charge | | - | 12 | - | nC |
| **Switching Characteristics** | | | | | | |
| $t_{d(on)}$ | Turn-On Delay Time | $V_{DD}$ = 200 V, $I_D$ = 15 A, $V_{GS}$ = 10 V, $R_G$ = 25 Ω (Note 4) | - | 26 | 62 | ns |
| $t_r$ | Turn-On Rise Time | | - | 55 | 120 | ns |
| $t_{d(off)}$ | Turn-Off Delay Time | | - | 72 | 154 | ns |
| $t_f$ | Turn-Off Fall Time | | - | 40 | 90 | ns |
| **Drain-Source Diode Characteristics** | | | | | | |
| $I_S$ | Maximum Continuous Drain to Source Diode Forward Current | | - | - | 15 | A |
| $I_{SM}$ | Maximum Pulsed Drain to Source Diode Forward Current | | - | - | 60 | A |
| $V_{SD}$ | Drain to Source Diode Forward Voltage | $V_{GS}$ = 0 V, $I_{SD}$ = 15 A | - | - | 1.4 | V |
| $t_{rr}$ | Reverse Recovery Time | $V_{GS}$ = 0 V, $I_{SD}$ = 15 A, $dI_F/dt$ = 100 A/µs | - | 333 | - | ns |
| $Q_{rr}$ | Reverse Recovery Charge | | - | 3.24 | - | µC |

**Notes:**

1: Repetitive rating: pulse-width limited by maximum junction temperature.

2: L = 6.5 mH, $I_{AS}$ = 15 A, $V_{DD}$ = 50 V, $R_G$ = 25 Ω, starting $T_J$ = 25°C.

3: $I_{SD}$ ≤ 15 A, di/dt ≤ 200 A/µs, $V_{DD}$ ≤ $BV_{DSS}$, starting $T_J$ = 25°C.

4: Essentially independent of operating temperature typical characteristics.



Downloaded from Arrow.com.

## Typical Performance Characteristics

**Figure 1. On-Region Characteristics**

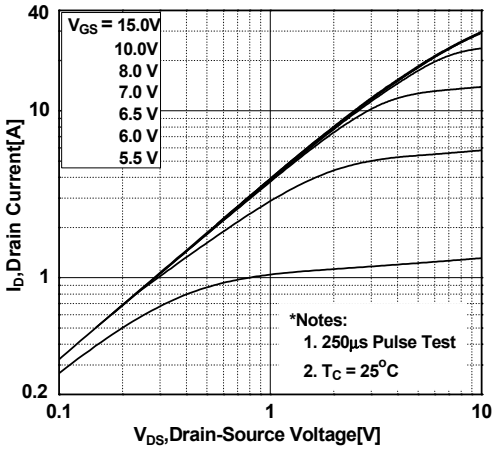


**Figure 2. Transfer Characteristics**

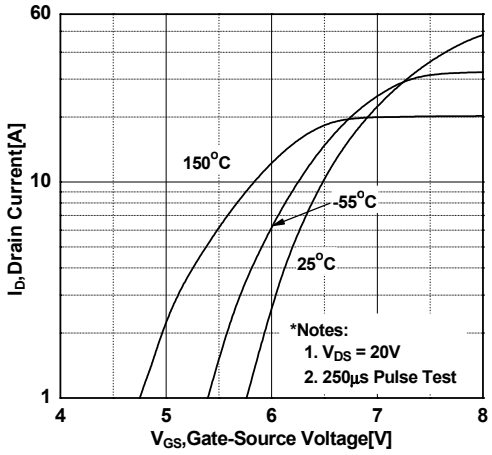


**Figure 3. On-Resistance Variation vs. Drain Current and Gate Voltage**

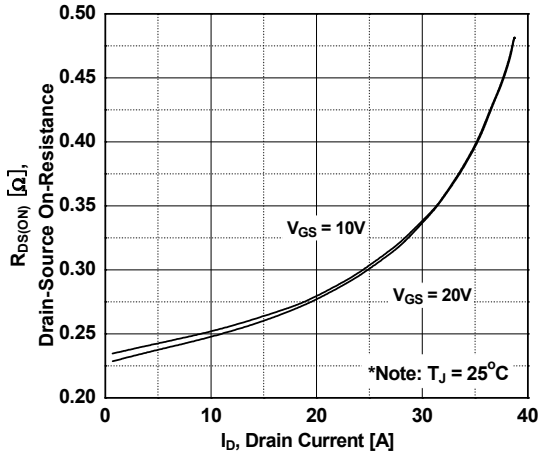


**Figure 4. Body Diode Forward Voltage Variation vs. Source Current and Temperature**

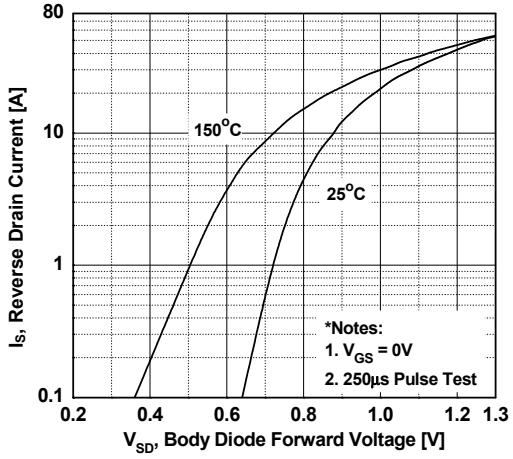


**Figure 5. Capacitance Characteristics**

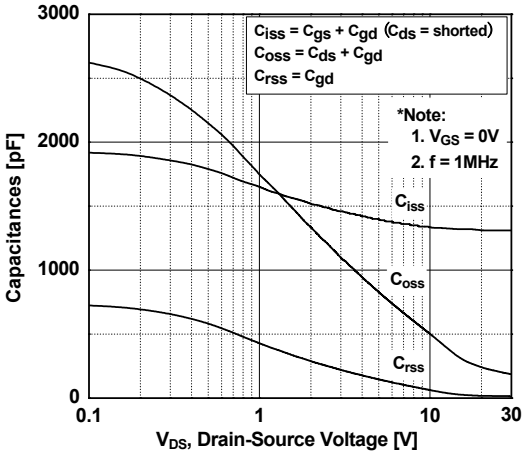


**Figure 6. Gate Charge Characteristics**

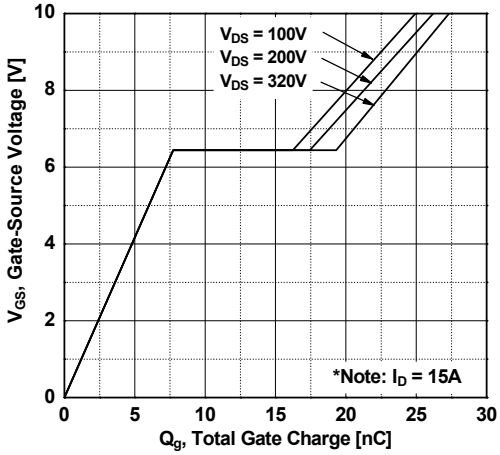




Downloaded from Arrow.com.

## Typical Performance Characteristics (Continued)

**Figure 7. Breakdown Voltage Variation vs. Temperature**

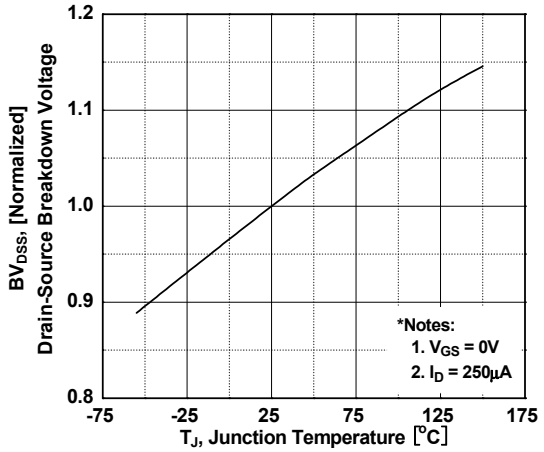


**Figure 8. On-Resistance Variation vs. Temperature**

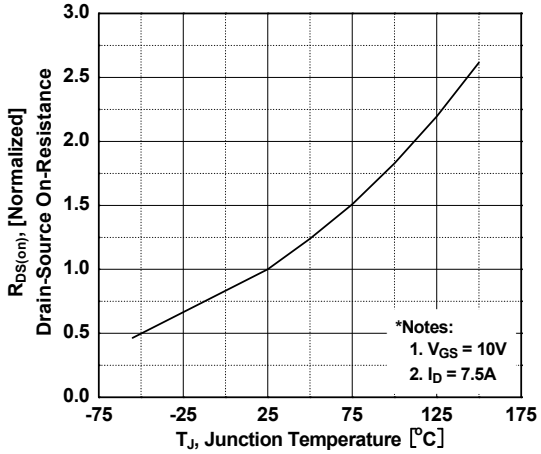


**Figure 9. Maximum Safe Operating Area**

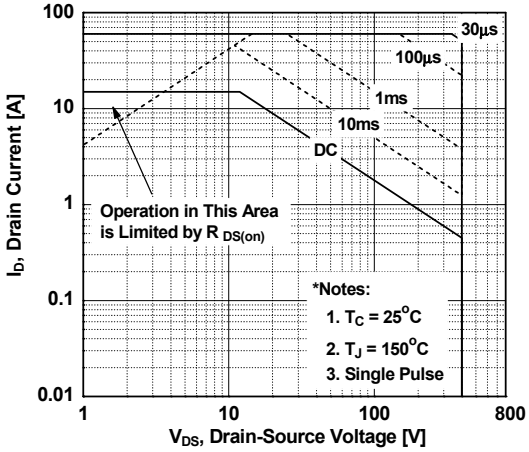


**Figure 10. Maximum Safe Operating Area**

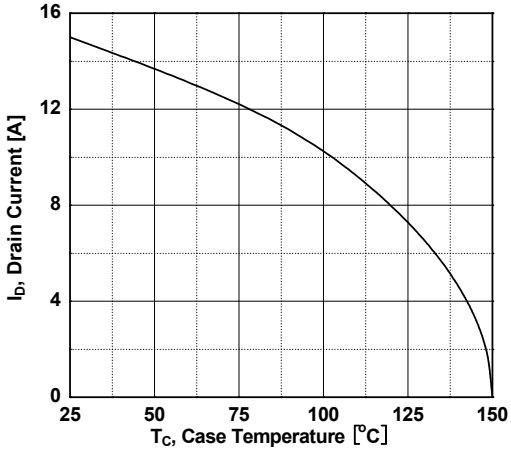


**Figure 11. Transient Thermal Response Curve**

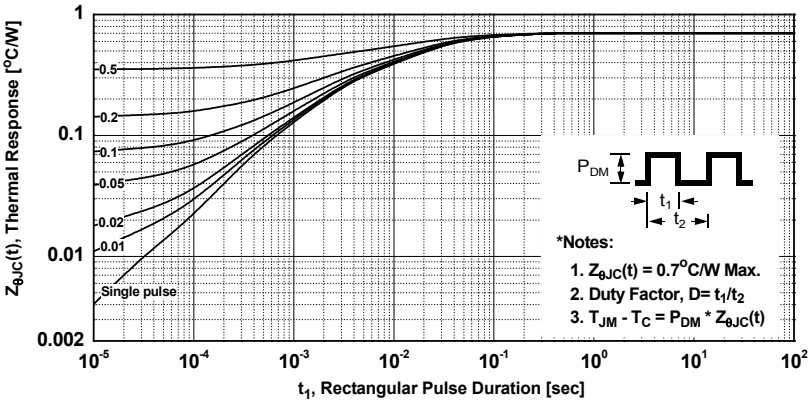




Downloaded from Arrow.com.

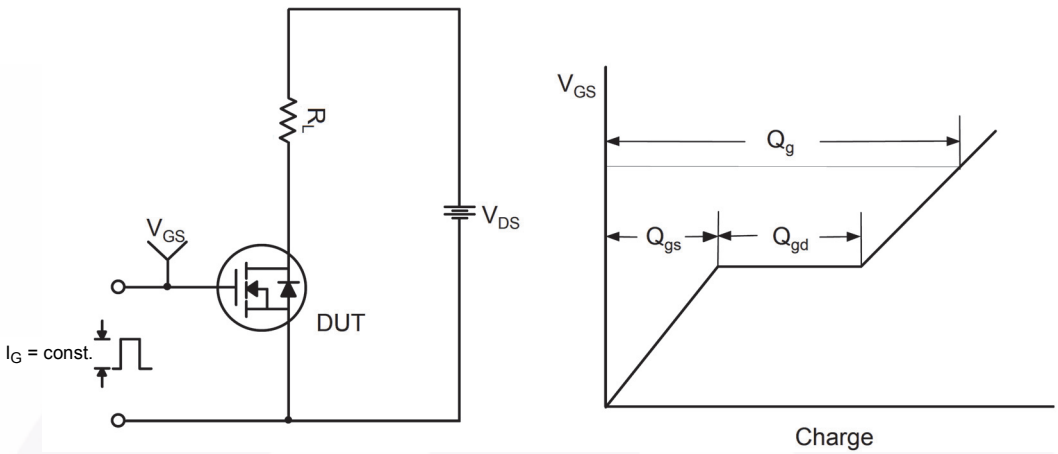


**Figure 12. Gate Charge Test Circuit & Waveform**

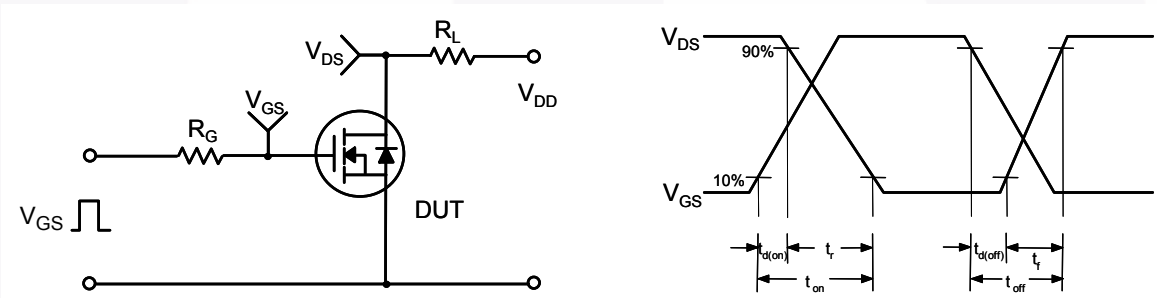


**Figure 13. Resistive Switching Test Circuit & Waveforms**

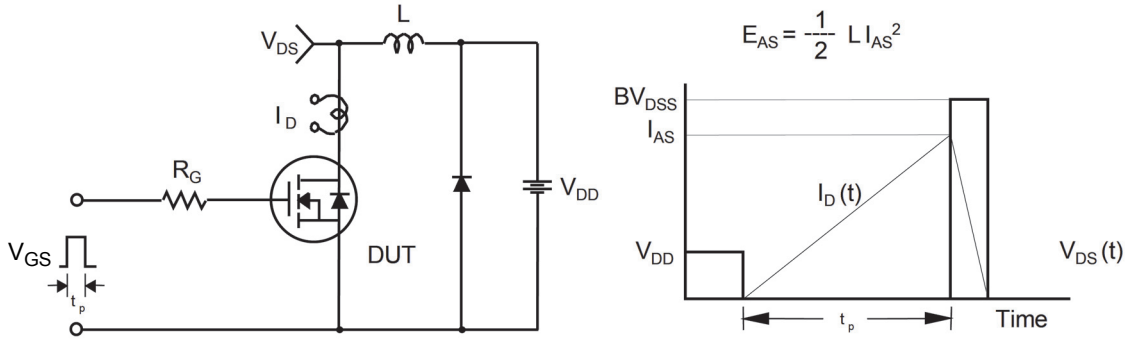


**Figure 14. Unclamped Inductive Switching Test Circuit & Waveforms**



Downloaded from Arrow.com.

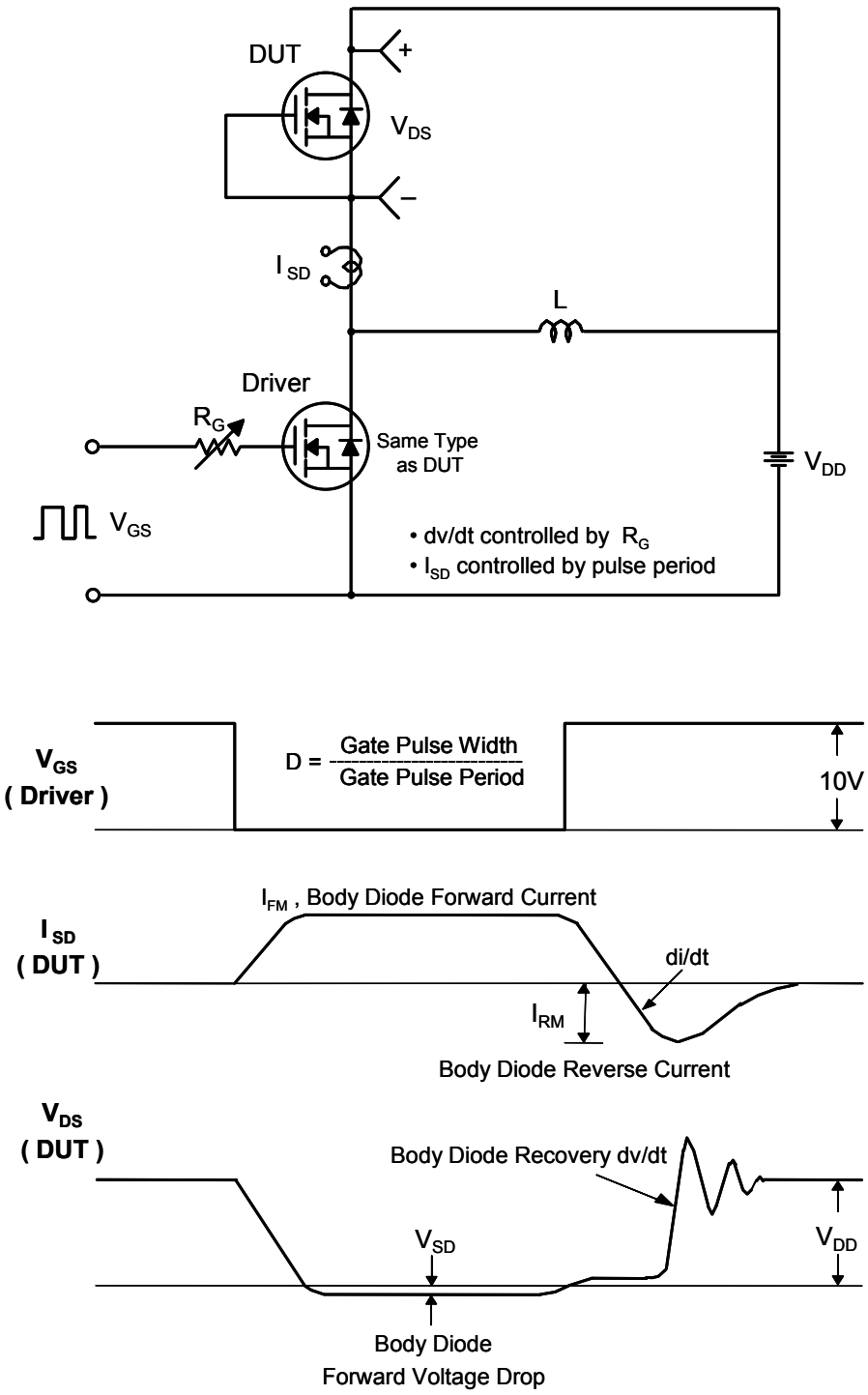


**Figure 15. Peak Diode Recovery dv/dt Test Circuit & Waveforms**



Downloaded from Arrow.com.

## Mechanical Dimensions

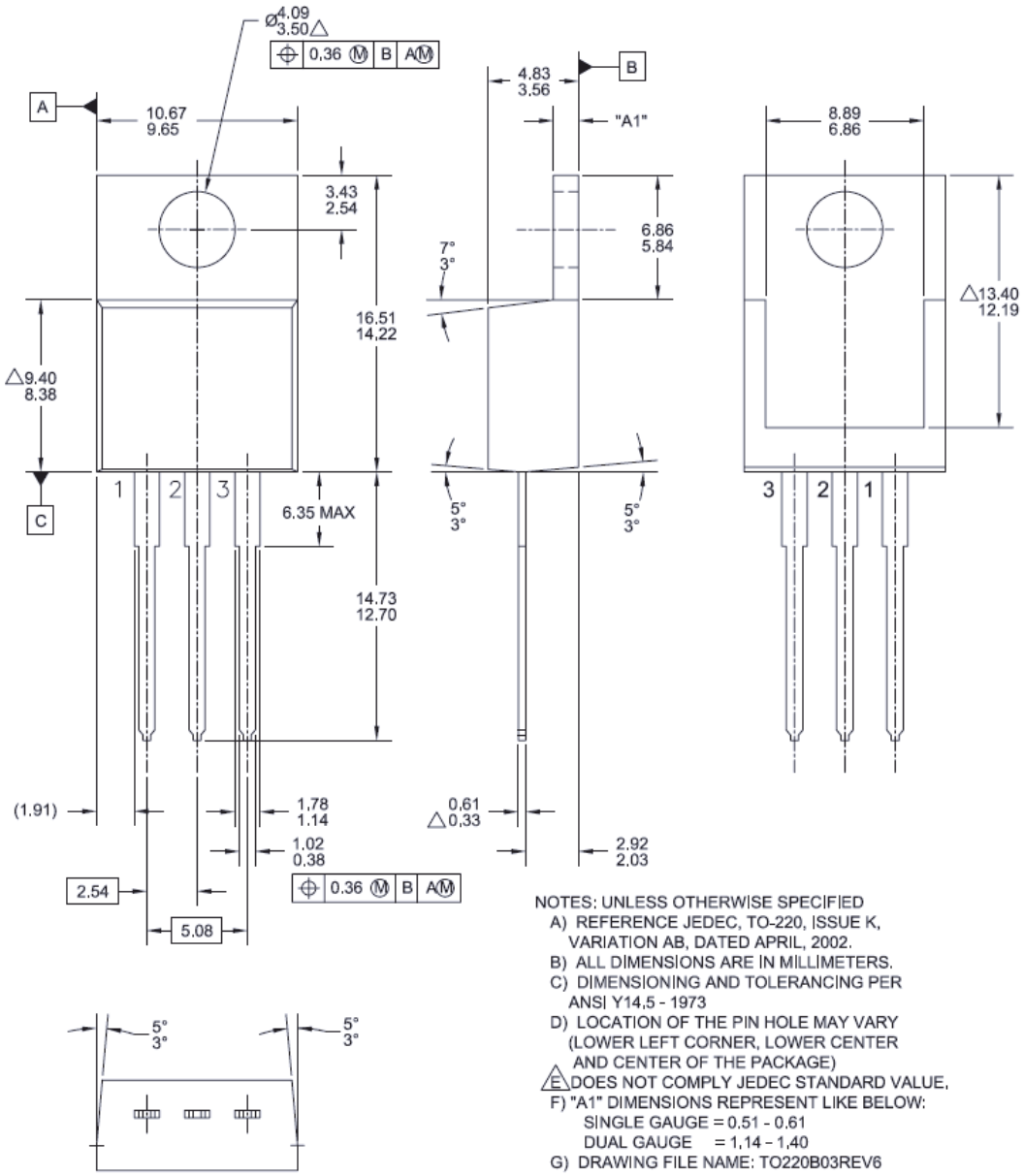


**Figure 16. TO-220, Molded, 3-Lead, Jedec Variation AB**

*Package drawings are provided as a service to customers considering Fairchild components. Drawings may change in any manner without notice. Please note the revision and/or date on the drawing and contact a Fairchild Semiconductor representative to verify or obtain the most recent revision. Package specifications do not expand the terms of Fairchild's worldwide terms and conditions, specifically the warranty therein, which covers Fairchild products.*

*Always visit Fairchild Semiconductor's online packaging area for the most recent package drawings:*

*http://www.fairchildsemi.com/package/packageDetails.html?id=PN_TT220-003*



Downloaded from Arrow.com.

FAIRCHILD SEMICONDUCTOR®

**TRADEMARKS**

The following includes registered and unregistered trademarks and service marks, owned by Fairchild Semiconductor and/or its global subsidiaries, and is not intended to be an exhaustive list of all such trademarks.

AccuPower™
AX-CAP®*
BitSiC™
Build it Now™
CorePLUS™
CorePOWER™
*CROSSVOLT*™
CTL™
Current Transfer Logic™
DEUXPEED®
Dual Cool™
EcoSPARK®
EfficentMax™
ESBC™
F®
Fairchild®
Fairchild Semiconductor®
FACT Quiet Series™
FACT®
FAST®
FastvCore™
FETBench™
FPS™
F-PFS™
FRFET®
Global Power Resource℠
GreenBridge™
Green FPS™
Green FPS™ e-Series™
G*max*™
GTO™
IntelliMAX™
ISOPLANAR™
Marking Small Speakers Sound Louder and Better™
MegaBuck™
MICROCOUPLER™
MicroFET™
MicroPak™
MicroPak2™
MillerDrive™
MotionMax™
mWSaver®
OptoHiT™
OPTOLOGIC®
OPTOPLANAR®
®
PowerTrench®
PowerXS™
Programmable Active Droop™
QFET®
QS™
Quiet Series™
RapidConfigure™
™
Saving our world, 1mW/W/kW at a time™
SignalWise™
SmartMax™
SMART START™
Solutions for Your Success™
SPM®
STEALTH™
SuperFET®
SuperSOT™-3
SuperSOT™-6
SuperSOT™-8
SupreMOS®
SyncFET™
Sync-Lock™
SYSTEM GENERAL ®*
TinyBoost®
TinyBuck®
TinyCalc™
TinyLogic®
TINYOPTO™
TinyPower™
TinyPWM™
TinyWire™
TranSiC™
TriFault Detect™
TRUECURRENT®*
µSerDes™
µSerDes™
UHC®
Ultra FRFET™
UniFET™
VCX™
VisualMax™
VoltagePlus™
XS™

*Trademarks of System General Corporation, used under license by Fairchild Semiconductor.

**DISCLAIMER**

FAIRCHILD SEMICONDUCTOR RESERVES THE RIGHT TO MAKE CHANGES WITHOUT FURTHER NOTICE TO ANY PRODUCTS HEREIN TO IMPROVE RELIABILITY, FUNCTION, OR DESIGN. FAIRCHILD DOES NOT ASSUME ANY LIABILITY ARISING OUT OF THE APPLICATION OR USE OF ANY PRODUCT OR CIRCUIT DESCRIBED HEREIN; NEITHER DOES IT CONVEY ANY LICENSE UNDER ITS PATENT RIGHTS, NOR THE RIGHTS OF OTHERS. THESE SPECIFICATIONS DO NOT EXPAND THE TERMS OF FAIRCHILD'S WORLDWIDE TERMS AND CONDITIONS, SPECIFICALLY THE WARRANTY THEREIN, WHICH COVERS THESE PRODUCTS.

**LIFE SUPPORT POLICY**

FAIRCHILD'S PRODUCTS ARE NOT AUTHORIZED FOR USE AS CRITICAL COMPONENTS IN LIFE SUPPORT DEVICES OR SYSTEMS WITHOUT THE EXPRESS WRITTEN APPROVAL OF FAIRCHILD SEMICONDUCTOR CORPORATION.

As used here in:

1. Life support devices or systems are devices or systems which, (a) are intended for surgical implant into the body or (b) support or sustain life, and (c) whose failure to perform when properly used in accordance with instructions for use provided in the labeling, can be reasonably expected to result in a significant injury of the user.
2. A critical component in any component of a life support, device, or system whose failure to perform can be reasonably expected to cause the failure of the life support device or system, or to affect its safety or effectiveness.

**ANTI-COUNTERFEITING POLICY**

Fairchild Semiconductor Corporation's Anti-Counterfeiting Policy. Fairchild's Anti-Counterfeiting Policy is also stated on our external website, www.Fairchildsemi.com, under Sales Support.

Counterfeiting of semiconductor parts is a growing problem in the industry. All manufactures of semiconductor products are experiencing counterfeiting of their parts. Customers who inadvertently purchase counterfeit parts experience many problems such as loss of brand reputation, substandard performance, failed application, and increased cost of production and manufacturing delays. Fairchild is taking strong measures to protect ourselves and our customers from the proliferation of counterfeit parts. Fairchild strongly encourages customers to purchase Fairchild parts either directly from Fairchild or from Authorized Fairchild Distributors who are listed by country on our web page cited above. Products customers buy either from Fairchild directly or from Authorized Fairchild Distributors are genuine parts, have full traceability, meet Fairchild's quality standards for handing and storage and provide access to Fairchild's full range of up-to-date technical and product information. Fairchild and our Authorized Distributors will stand behind all warranties and will appropriately address and warranty issues that may arise. Fairchild will not provide any warranty coverage or other assistance for parts bought from Unauthorized Sources. Fairchild is committed to combat this global problem and encourage our customers to do their part in stopping this practice by buying direct or from authorized distributors.

**PRODUCT STATUS DEFINITIONS**

**Definition of Terms**

| Datasheet Identification | Product Status | Definition |
|---|---|---|
| Advance Information | Formative / In Design | Datasheet contains the design specifications for product development. Specifications may change in any manner without notice. |
| Preliminary | First Production | Datasheet contains preliminary data; supplementary data will be published at a later date. Fairchild Semiconductor reserves the right to make changes at any time without notice to improve design. |
| No Identification Needed | Full Production | Datasheet contains final specifications. Fairchild Semiconductor reserves the right to make changes at any time without notice to improve the design. |
| Obsolete | Not In Production | Datasheet contains specifications on a product that is discontinued by Fairchild Semiconductor. The datasheet is for reference information only. |

Rev. I66



Downloaded from Arrow.com.

ON Semiconductor and ON are trademarks of Semiconductor Components Industries, LLC dba ON Semiconductor or its subsidiaries in the United States and/or other countries. ON Semiconductor owns the rights to a number of patents, trademarks, copyrights, trade secrets, and other intellectual property. A listing of ON Semiconductor's product/patent coverage may be accessed at www.onsemi.com/site/pdf/Patent−Marking.pdf. ON Semiconductor reserves the right to make changes without further notice to any products herein. ON Semiconductor makes no warranty, representation or guarantee regarding the suitability of its products for any particular purpose, nor does ON Semiconductor assume any liability arising out of the application or use of any product or circuit, and specifically disclaims any and all liability, including without limitation special, consequential or incidental damages. Buyer is responsible for its products and applications using ON Semiconductor products, including compliance with all laws, regulations and safety requirements or standards, regardless of any support or applications information provided by ON Semiconductor. "Typical" parameters which may be provided in ON Semiconductor data sheets and/or specifications can and do vary in different applications and actual performance may vary over time. All operating parameters, including "Typicals" must be validated for each customer application by customer's technical experts. ON Semiconductor does not convey any license under its patent rights nor the rights of others. ON Semiconductor products are not designed, intended, or authorized for use as a critical component in life support systems or any FDA Class 3 medical devices or medical devices with a same or similar classification in a foreign jurisdiction or any devices intended for implantation in the human body. Should Buyer purchase or use ON Semiconductor products for any such unintended or unauthorized application, Buyer shall indemnify and hold ON Semiconductor and its officers, employees, subsidiaries, affiliates, and distributors harmless against all claims, costs, damages, and expenses, and reasonable attorney fees arising out of, directly or indirectly, any claim of personal injury or death associated with such unintended or unauthorized use, even if such claim alleges that ON Semiconductor was negligent regarding the design or manufacture of the part. ON Semiconductor is an Equal Opportunity/Affirmative Action Employer. This literature is subject to all applicable copyright laws and is not for resale in any manner.

## PUBLICATION ORDERING INFORMATION

**LITERATURE FULFILLMENT**:
Literature Distribution Center for ON Semiconductor
19521 E. 32nd Pkwy, Aurora, Colorado 80011 USA
**Phone**: 303−675−2175 or 800−344−3860 Toll Free USA/Canada
**Fax**: 303−675−2176 or 800−344−3867 Toll Free USA/Canada
**Email**: orderlit@onsemi.com

**N. American Technical Support**: 800−282−9855 Toll Free USA/Canada
**Europe, Middle East and Africa Technical Support:**
Phone: 421 33 790 2910
**Japan Customer Focus Center**
Phone: 81−3−5817−1050

**ON Semiconductor Website**: **www.onsemi.com**

**Order Literature**: http://www.onsemi.com/orderlit

For additional information, please contact your local Sales Representative



Downloaded from Arrow.com.