FAIRCHILD™

Is Now Part of

ON

ON Semiconductor®

To learn more about ON Semiconductor, please visit our website at
www.onsemi.com

Please note: As part of the Fairchild Semiconductor integration, some of the Fairchild orderable part numbers will need to change in order to meet ON Semiconductor's system requirements. Since the ON Semiconductor product management systems do not have the ability to manage part nomenclature that utilizes an underscore (_), the underscore (_) in the Fairchild part numbers will be changed to a dash (-). This document may contain device numbers with an underscore (_). Please check the ON Semiconductor website to verify the updated device numbers. The most current and up-to-date ordering information can be found at www.onsemi.com. Please email any questions regarding the system integration to Fairchild_questions@onsemi.com.

ON Semiconductor and the ON Semiconductor logo are trademarks of Semiconductor Components Industries, LLC dba ON Semiconductor or its subsidiaries in the United States and/or other countries. ON Semiconductor owns the rights to a number of patents, trademarks, copyrights, trade secrets, and other intellectual property. A listing of ON Semiconductor's product/patent coverage may be accessed at www.onsemi.com/site/pdf/Patent-Marking.pdf. ON Semiconductor reserves the right to make changes without further notice to any products herein. ON Semiconductor makes no warranty, representation or guarantee regarding the suitability of its products for any particular purpose, nor does ON Semiconductor assume any liability arising out of the application or use of any product or circuit, and specifically disclaims any and all liability, including without limitation special, consequential or incidental damages. Buyer is responsible for its products and applications using ON Semiconductor products, including compliance with all laws, regulations and safety requirements or standards, regardless of any support or applications information provided by ON Semiconductor. "Typical" parameters which may be provided in ON Semiconductor data sheets and/or specifications can and do vary in different applications and actual performance may vary over time. All operating parameters, including "Typicals" must be validated for each customer application by customer's technical experts. ON Semiconductor does not convey any license under its patent rights nor the rights of others. ON Semiconductor products are not designed, intended, or authorized for use as a critical component in life support systems or any FDA Class 3 medical devices or medical devices with a same or similar classification in a foreign jurisdiction or any devices intended for implantation in the human body. Should Buyer purchase or use ON Semiconductor products for any such unintended or unauthorized application, Buyer shall indemnify and hold ON Semiconductor and its officers, employees, subsidiaries, affiliates, and distributors harmless against all claims, costs, damages, and expenses, and reasonable attorney fees arising out of, directly or indirectly, any claim of personal injury or death associated with such unintended or unauthorized use, even if such claim alleges that ON Semiconductor was negligent regarding the design or manufacture of the part. ON Semiconductor is an Equal Opportunity/Affirmative Action Employer. This literature is subject to all applicable copyright laws and is not for resale in any manner.

Downloaded from Arrow.com.

FAIRCHILD SEMICONDUCTOR®

November 2013

FDD3N40 / FDU3N40

N-Channel UniFET™ MOSFET

400 V, 2 A, 3.4 Ω

Features

- $R_{DS(on)}$ = 3.4 Ω (Typ.) @ V_{GS} = 10 V, I_D = 1 A
- Low Gate Charge (Typ. 4.5 nC)
- Low C_{rss} (Typ. 3.7 pF)
- 100% Avalanche Tested

Applications

- LED TV
- Consumer Appliances
- Lighting
- Uninterruptible Power Supply

Description

UniFET™ MOSFET is Fairchild Semiconductor's high voltage MOSFET family based on planar stripe and DMOS technology. This MOSFET is tailored to reduce on-state resistance, and to provide better switching performance and higher avalanche energy strength. This device family is suitable for switching power converter applications such as power factor correction (PFC), flat panel display (FPD) TV power, ATX and electronic lamp ballasts.

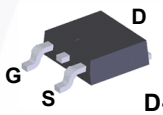

D-PAK

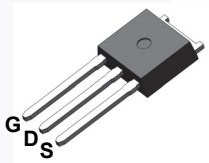

I-PAK

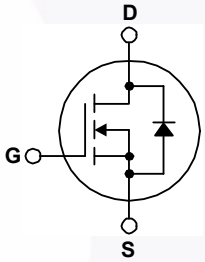

Absolute Maximum Ratings

T_C = 25°C unless otherwise noted.

Symbol	Parameter		FDD3N40TM / FDU3N40TU	Unit
V_{DSS}	Drain-Source Voltage		400	V
I_D	Drain Current	- Continuous (T_C = 25°C) - Continuous (T_C = 100°C)	2.0 1.25	A A
I_{DM}	Drain Current	- Pulsed (Note 1)	8.0	A
V_{GSS}	Gate-Source voltage		±30	V
E_{AS}	Single Pulsed Avalanche Energy	(Note 2)	46	mJ
I_{AR}	Avalanche Current	(Note 1)	2	A
E_{AR}	Repetitive Avalanche Energy	(Note 1)	3	mJ
dv/dt	Peak Diode Recovery dv/dt	(Note 3)	4.5	V/ns
P_D	Power Dissipation	(T_C = 25°C) - Derate Above 25°C	30 0.24	W W/°C
T_J, T_{STG}	Operating and Storage Temperature Range		-55 to +150	°C
T_L	Maximum Lead Temperature for Soldering, 1/8" from Case for 5 Seconds		300	°C

Thermal Characteristics

Symbol	Parameter	FDD3N40TM / FDU3N40TU	Unit
$R_{\theta JC}$	Thermal Resistance, Junction-to-Case, Max.	4.2	°C/W
$R_{\theta JA}$	Thermal Resistance, Junction to Ambient, Max.	110	°C/W

©2007 Fairchild Semiconductor Corporation

Downloaded from Arrow.com.

Package Marking and Ordering Information

Part Number	Top Mark	Package	Packing Method	Reel Size	Tape Width	Quantity
FDD3N40TM	FDD3N40	DPAK	Tape and Reel	330 mm	16 mm	2500 units
FDU3N40TU	FDU3N40	IPAK	Tube	N/A	N/A	75 units

Electrical Characteristics T_C = 25°C unless otherwise noted.

Symbol	Parameter	Conditions	Min.	Typ.	Max	Unit
Off Characteristics						
BV_{DSS}	Drain-Source Breakdown Voltage	V_{GS} = 0 V, I_D = 250 µA	400	--	--	V
ΔBV_{DSS} / ΔT_J	Breakdown Voltage Temperature Coefficient	I_D = 250 µA, Referenced to 25°C	--	0.4	--	V/°C
I_{DSS}	Zero Gate Voltage Drain Current	V_{DS} = 400 V, V_{GS} = 0 V V_{DS} = 320 V, T_C = 125°C	-- --	-- --	1 10	µA µA
I_{GSSF}	Gate-Body Leakage Current, Forward	V_{GS} = 30 V, V_{DS} = 0 V	--	--	100	nA
I_{GSSR}	Gate-Body Leakage Current, Reverse	V_{GS} = -30 V, V_{DS} = 0 V	--	--	-100	nA
On Characteristics						
$V_{GS(th)}$	Gate Threshold Voltage	V_{DS} = V_{GS}, I_D = 250 µA	3.0	--	5.0	V
$R_{DS(on)}$	Static Drain-Source On-Resistance	V_{GS} = 10 V, I_D = 1 A	--	2.8	3.4	Ω
g_{FS}	Forward Transconductance	V_{DS} = 40 V, I_D = 1 A	--	2	--	S
Dynamic Characteristics						
C_{iss}	Input Capacitance	V_{DS} = 25 V, V_{GS} = 0 V, f = 1 MHz	--	173	225	pF
C_{oss}	Output Capacitance		--	30	40	pF
C_{rss}	Reverse Transfer Capacitance		--	3.7	6	pF
Switching Characteristics						
$t_{d(on)}$	Turn-On Delay Time	V_{DD} = 200 V, I_D = 3 A, V_{GS} = 10 V, R_G = 25 Ω (Note 4)	--	10	30	ns
t_r	Turn-On Rise Time		--	30	70	ns
$t_{d(off)}$	Turn-Off Delay Time		--	10	30	ns
t_f	Turn-Off Fall Time		--	25	60	ns
Q_g	Total Gate Charge	V_{DS} = 320 V, I_D = 3 A, V_{GS} = 10 V (Note 4)	--	4.5	6	nC
Q_{gs}	Gate-Source Charge		--	1.2	--	nC
Q_{gd}	Gate-Drain Charge		--	2	--	nC
Drain-Source Diode Characteristics and Maximum Ratings						
I_S	Maximum Continuous Drain-Source Diode Forward Current		--	--	2	A
I_{SM}	Maximum Pulsed Drain-Source Diode Forward Current		--	--	8	A
V_{SD}	Drain-Source Diode Forward Voltage	V_{GS} = 0 V, I_S = 2 A	--	--	1.4	V
t_{rr}	Reverse Recovery Time	V_{GS} = 0 V, I_S = 3 A, dI_F/dt =100 A/µs	--	210	--	ns
Q_{rr}	Reverse Recovery Charge		--	0.75	--	µC

Notes:
1. Repetitive rating: pulse-width limited by maximum junction temperature.
2. L = 20 mH, I_{AS} = 2 A, V_{DD} = 50 V, R_G = 25 Ω, starting T_J = 25°C.
3. $I_{SD} \leq$ 2 A, di/dt ≤ 200 A/µs, $V_{DD} \leq BV_{DSS}$, starting T_J = 25°C.
4. Essentially independent of operating temperature typical characteristics.

Downloaded from Arrow.com.

Typical Performance Characteristics

Figure 1. On-Region Characteristics

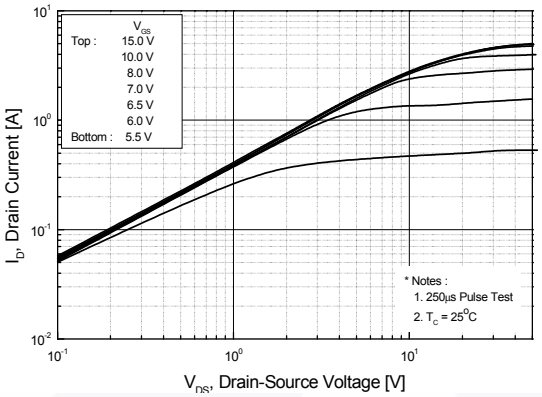

Figure 2. Transfer Characteristics

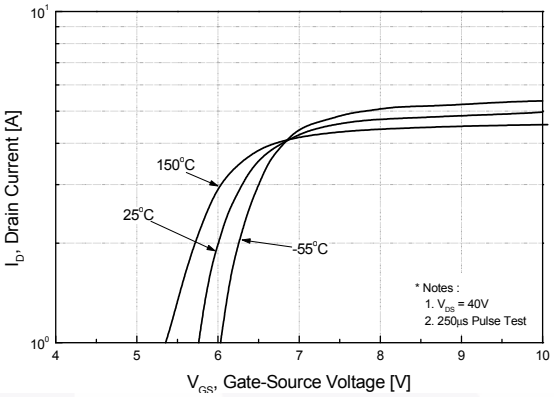

Figure 3. On-Resistance Variation vs. Drain Current and Gate Voltage

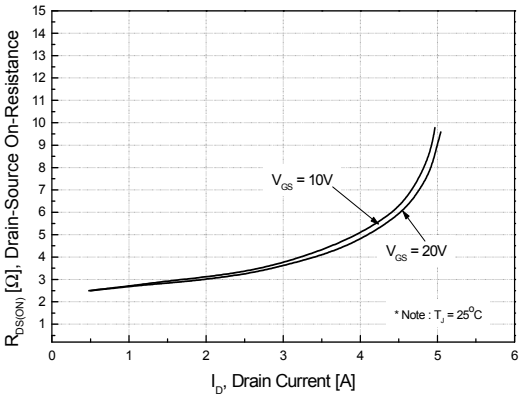

Figure 4. Body Diode Forward Voltage Variation vs. Source Current and Temperatue

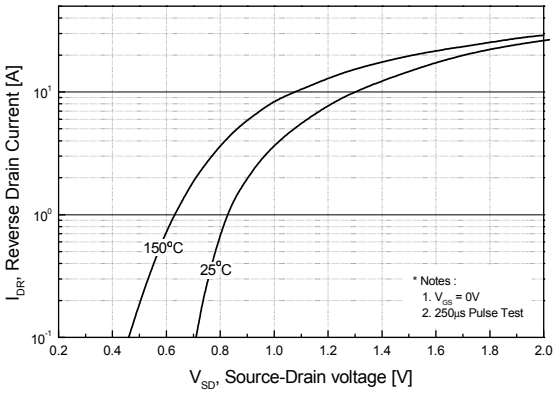

Figure 5. Capacitance Characteristics

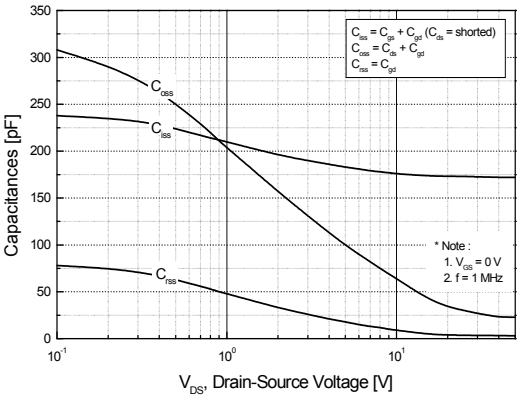

Figure 6. Gate Charge Characteristics

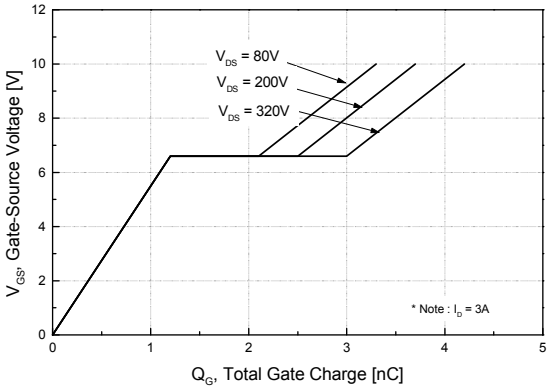

Downloaded from Arrow.com.

Typical Performance Characteristics (Continued)

Figure 7. Breakdown Voltage Variation vs. Temperature

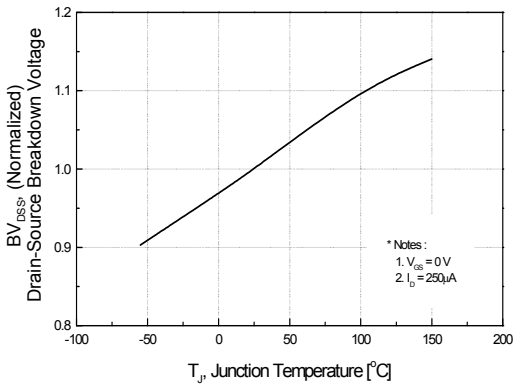

Figure 8. On-Resistance Variation vs. Temperature

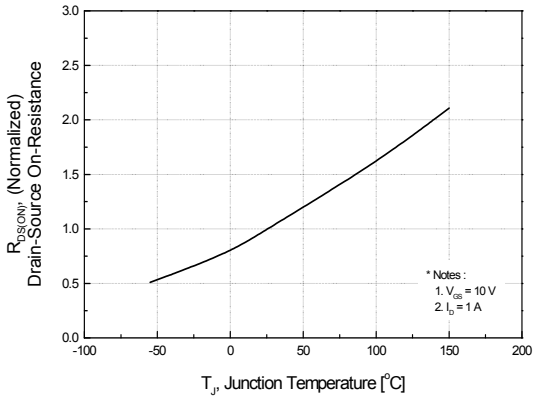

Figure 9. Maximum Safe Operating Area

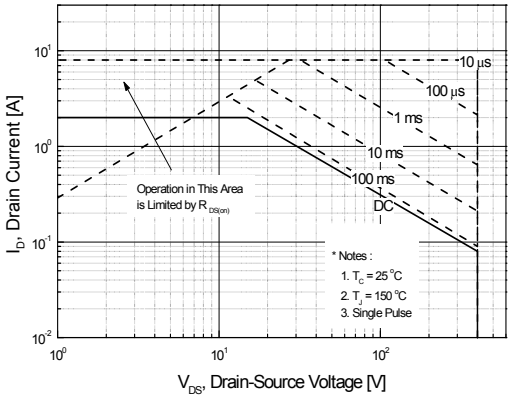

Figure 10. Maximum Drain Current vs. Case Temperature

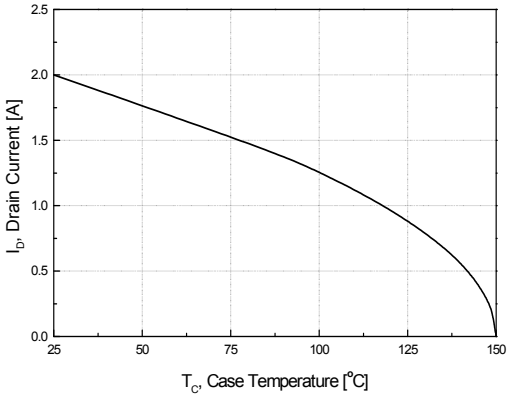

Figure 11. Transient Thermal Response Curve

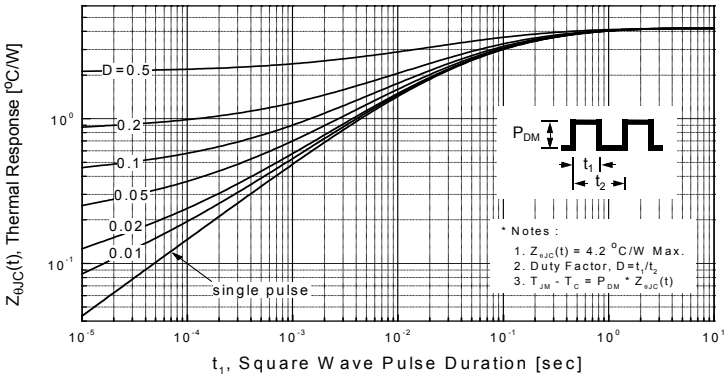

Downloaded from Arrow.com.

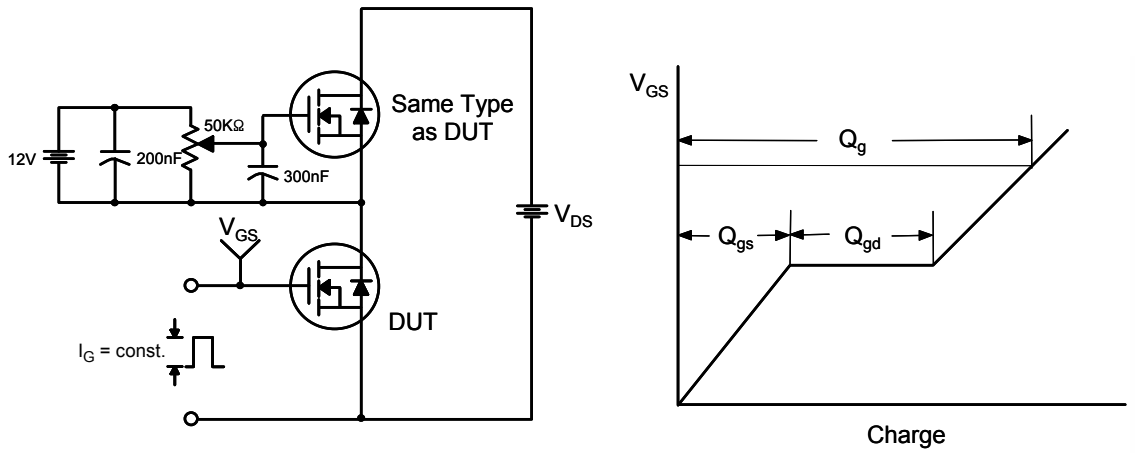

Figure 12. Gate Charge Test Circuit & Waveform

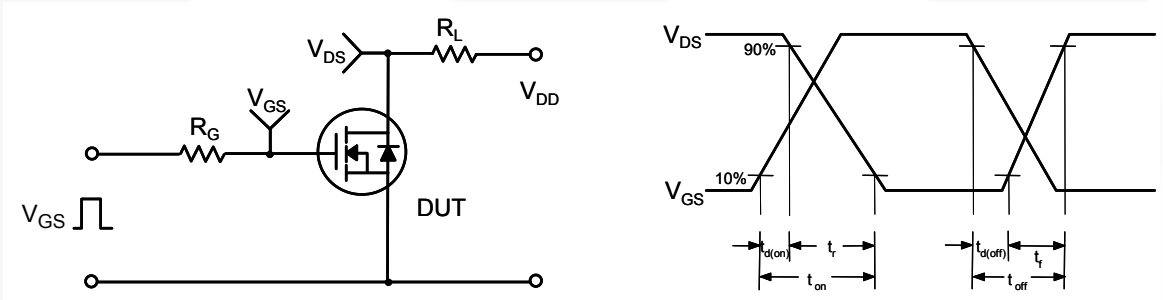

Figure 13. Resistive Switching Test Circuit & Waveforms

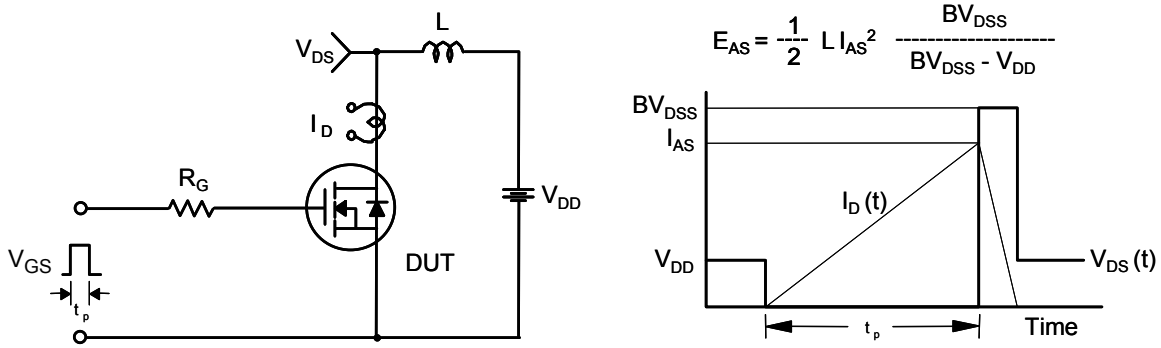

Figure 14. Unclamped Inductive Switching Test Circuit & Waveforms

Downloaded from Arrow.com.

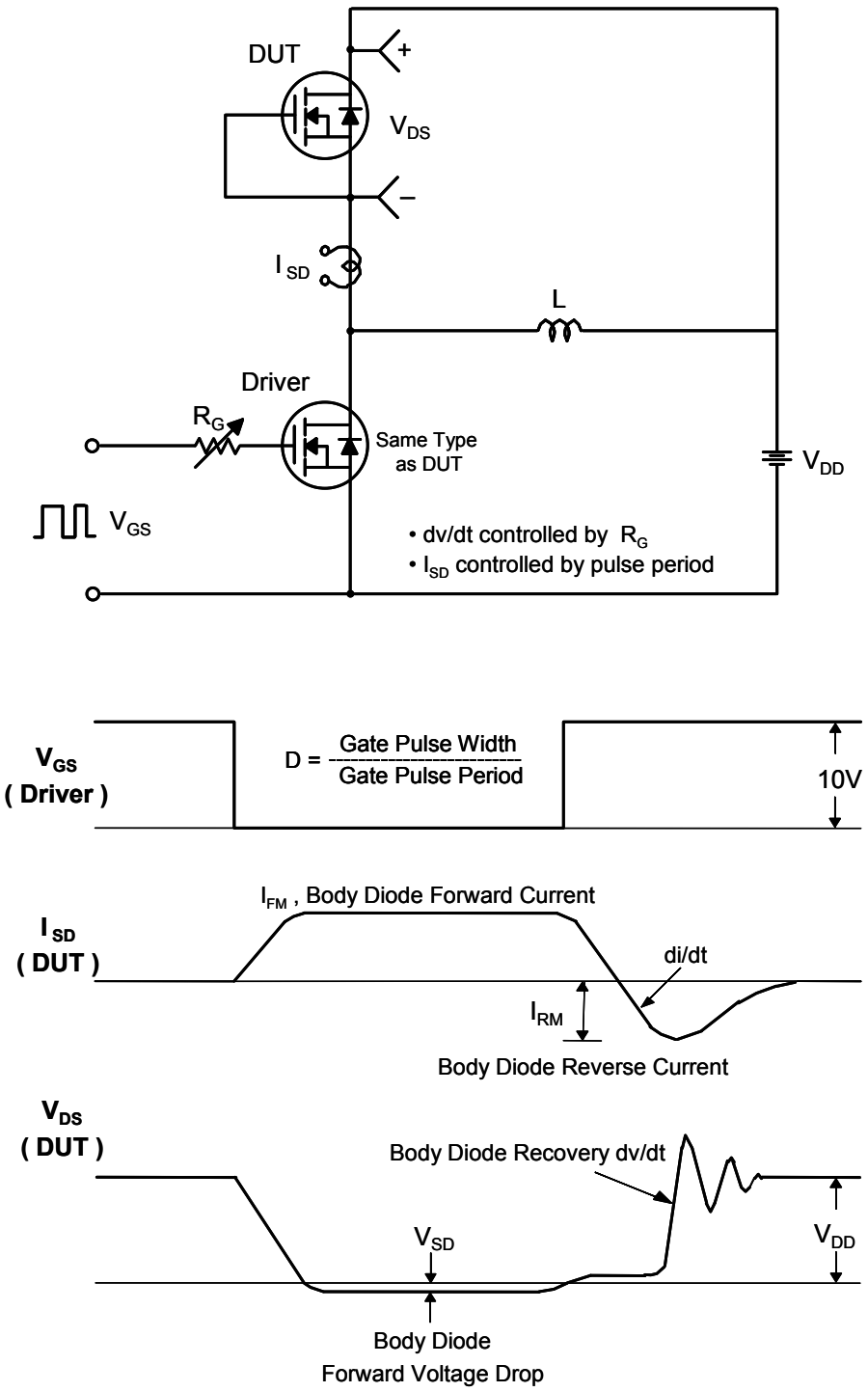

Figure 15. Peak Diode Recovery dv/dt Test Circuit & Waveforms

Downloaded from Arrow.com.

Mechanical Dimensions

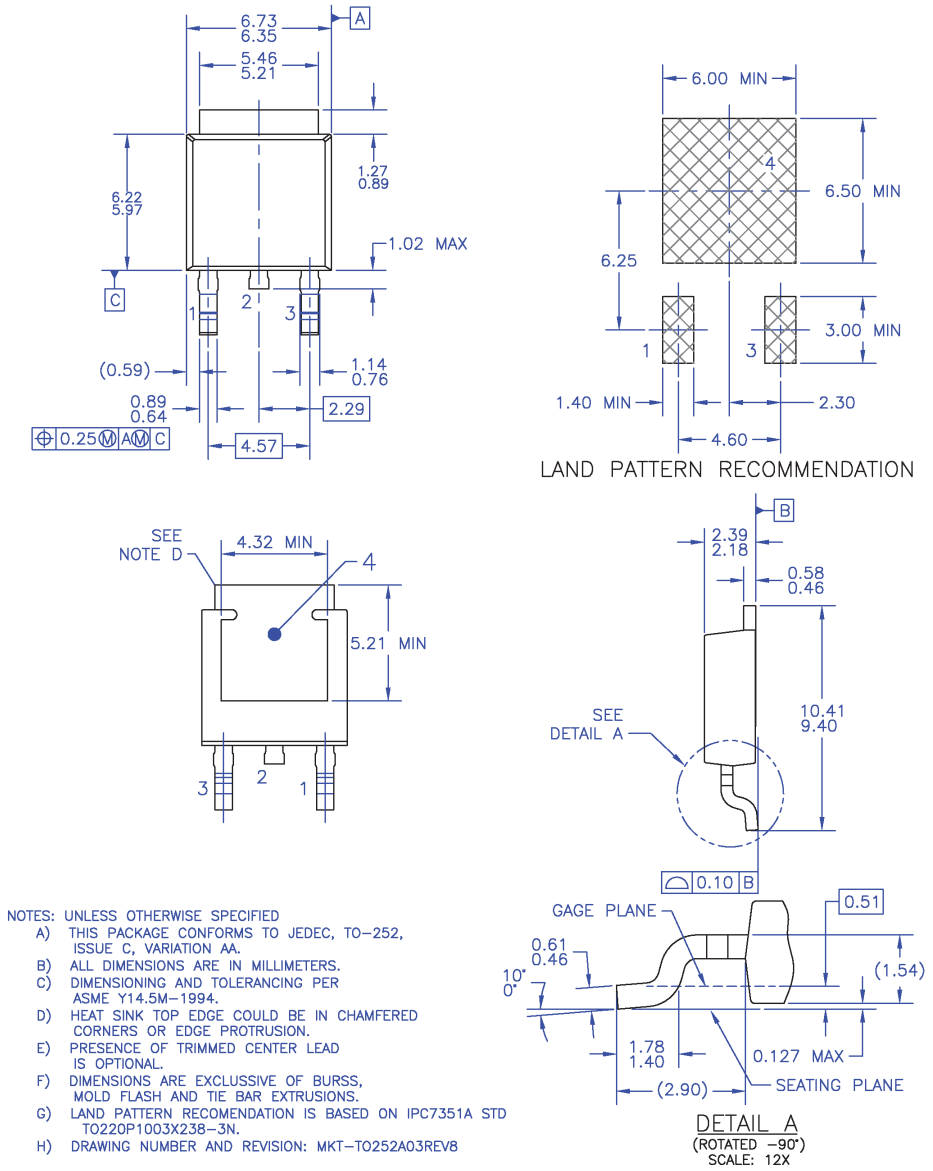

Figure 16. TO252 (D-PAK), Molded, 3-Lead, Option AA&AB

Package drawings are provided as a service to customers considering Fairchild components. Drawings may change in any manner without notice. Please note the revision and/or date on the drawing and contact a Fairchild Semiconductor representative to verify or obtain the most recent revision. Package specifications do not expand the terms of Fairchild's worldwide terms and conditions, specifically the warranty therein, which covers Fairchild products.

Always visit Fairchild Semiconductor's online packaging area for the most recent package drawings:

http://www.fairchildsemi.com/package/packageDetails.html?id=PN_TT252-003

Downloaded from Arrow.com.

Mechanical Dimensions

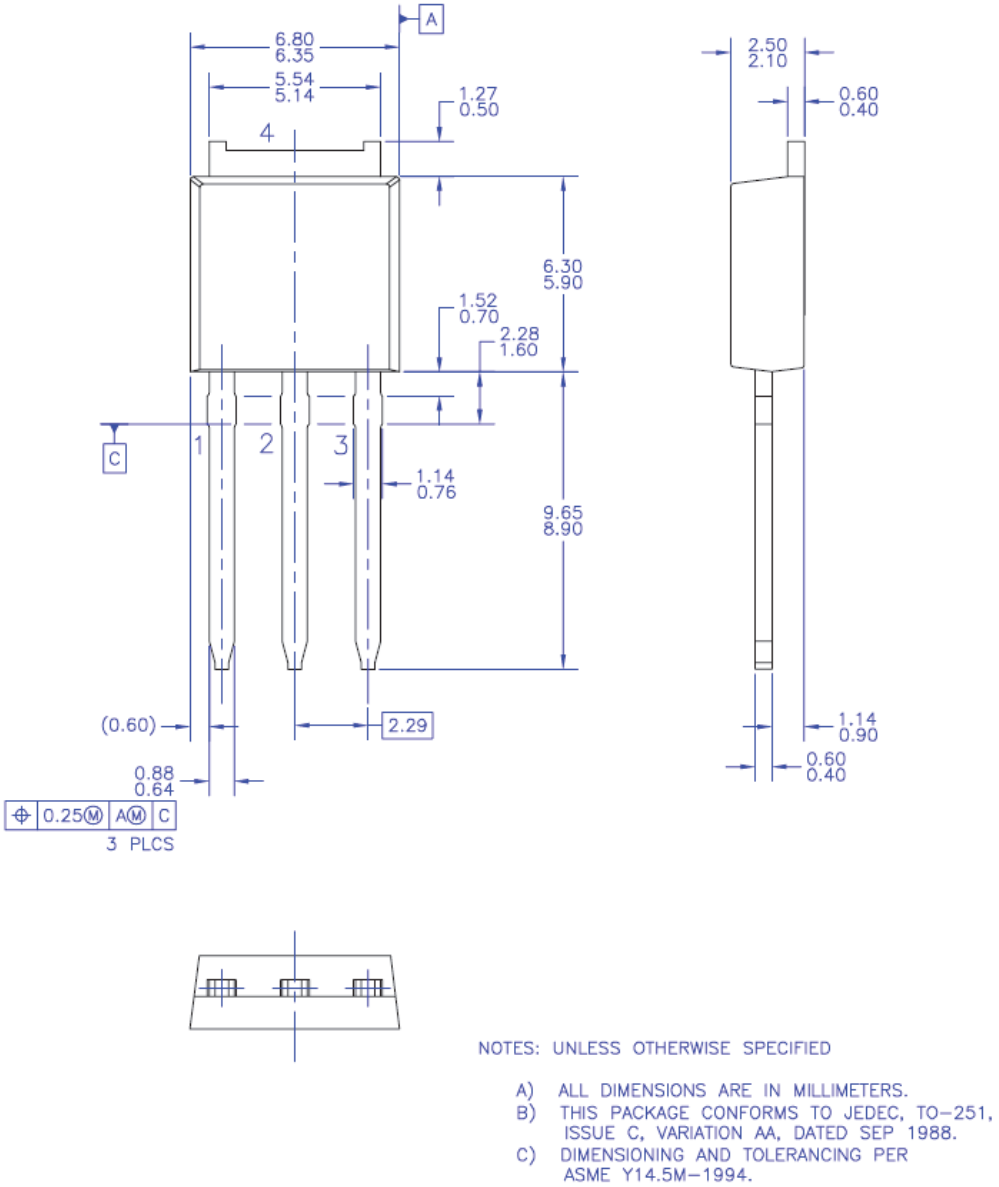

Figure 17. TO-251 (I-PAK), Molded, 3-Lead, Option AA

Package drawings are provided as a service to customers considering Fairchild components. Drawings may change in any manner without notice. Please note the revision and/or date on the drawing and contact a Fairchild Semiconductor representative to verify or obtain the most recent revision. Package specifications do not expand the terms of Fairchild's worldwide terms and conditions, specifically the warranty therein, which covers Fairchild products.

Always visit Fairchild Semiconductor's online packaging area for the most recent package drawings:

http://www.fairchildsemi.com/package/packageDetails.html?id=PN_TT251-003

Downloaded from Arrow.com.

FAIRCHILD SEMICONDUCTOR®

TRADEMARKS

The following includes registered and unregistered trademarks and service marks, owned by Fairchild Semiconductor and/or its global subsidiaries, and is not intended to be an exhaustive list of all such trademarks.

AccuPower™
AX-CAP®*
BitSiC™
Build it Now™
CorePLUS™
CorePOWER™
CROSSVOLT™
CTL™
Current Transfer Logic™
DEUXPEED®
Dual Cool™
EcoSPARK®
EfficentMax™
ESBC™
F®
Fairchild®
Fairchild Semiconductor®
FACT Quiet Series™
FACT®
FAST®
FastvCore™
FETBench™
FPS™
F-PFS™
FRFET®
Global Power Resource℠
GreenBridge™
Green FPS™
Green FPS™ e-Series™
G*max*™
GTO™
IntelliMAX™
ISOPLANAR™
Marking Small Speakers Sound Louder and Better™
MegaBuck™
MICROCOUPLER™
MicroFET™
MicroPak™
MicroPak2™
MillerDrive™
MotionMax™
mWSaver®
OptoHiT™
OPTOLOGIC®
OPTOPLANAR®
®
PowerTrench®
PowerXS™
Programmable Active Droop™
QFET®
QS™
Quiet Series™
RapidConfigure™
™
Saving our world, 1mW/W/kW at a time™
SignalWise™
SmartMax™
SMART START™
Solutions for Your Success™
SPM®
STEALTH™
SuperFET®
SuperSOT™-3
SuperSOT™-6
SuperSOT™-8
SupreMOS®
SyncFET™
Sync-Lock™
SYSTEM GENERAL ®*
TinyBoost®
TinyBuck®
TinyCalc™
TinyLogic®
TINYOPTO™
TinyPower™
TinyPWM™
TinyWire™
TranSiC™
TriFault Detect™
TRUECURRENT®*
µSerDes™
µSerDes™
UHC®
Ultra FRFET™
UniFET™
VCX™
VisualMax™
VoltagePlus™
XS™

*Trademarks of System General Corporation, used under license by Fairchild Semiconductor.

DISCLAIMER

FAIRCHILD SEMICONDUCTOR RESERVES THE RIGHT TO MAKE CHANGES WITHOUT FURTHER NOTICE TO ANY PRODUCTS HEREIN TO IMPROVE RELIABILITY, FUNCTION, OR DESIGN. FAIRCHILD DOES NOT ASSUME ANY LIABILITY ARISING OUT OF THE APPLICATION OR USE OF ANY PRODUCT OR CIRCUIT DESCRIBED HEREIN; NEITHER DOES IT CONVEY ANY LICENSE UNDER ITS PATENT RIGHTS, NOR THE RIGHTS OF OTHERS. THESE SPECIFICATIONS DO NOT EXPAND THE TERMS OF FAIRCHILD'S WORLDWIDE TERMS AND CONDITIONS, SPECIFICALLY THE WARRANTY THEREIN, WHICH COVERS THESE PRODUCTS.

LIFE SUPPORT POLICY

FAIRCHILD'S PRODUCTS ARE NOT AUTHORIZED FOR USE AS CRITICAL COMPONENTS IN LIFE SUPPORT DEVICES OR SYSTEMS WITHOUT THE EXPRESS WRITTEN APPROVAL OF FAIRCHILD SEMICONDUCTOR CORPORATION.

As used here in:

1. Life support devices or systems are devices or systems which, (a) are intended for surgical implant into the body or (b) support or sustain life, and (c) whose failure to perform when properly used in accordance with instructions for use provided in the labeling, can be reasonably expected to result in a significant injury of the user.
2. A critical component in any component of a life support, device, or system whose failure to perform can be reasonably expected to cause the failure of the life support device or system, or to affect its safety or effectiveness.

ANTI-COUNTERFEITING POLICY

Fairchild Semiconductor Corporation's Anti-Counterfeiting Policy. Fairchild's Anti-Counterfeiting Policy is also stated on our external website, www.Fairchildsemi.com, under Sales Support.

Counterfeiting of semiconductor parts is a growing problem in the industry. All manufactures of semiconductor products are experiencing counterfeiting of their parts. Customers who inadvertently purchase counterfeit parts experience many problems such as loss of brand reputation, substandard performance, failed application, and increased cost of production and manufacturing delays. Fairchild is taking strong measures to protect ourselves and our customers from the proliferation of counterfeit parts. Fairchild strongly encourages customers to purchase Fairchild parts either directly from Fairchild or from Authorized Fairchild Distributors who are listed by country on our web page cited above. Products customers buy either from Fairchild directly or from Authorized Fairchild Distributors are genuine parts, have full traceability, meet Fairchild's quality standards for handing and storage and provide access to Fairchild's full range of up-to-date technical and product information. Fairchild and our Authorized Distributors will stand behind all warranties and will appropriately address and warranty issues that may arise. Fairchild will not provide any warranty coverage or other assistance for parts bought from Unauthorized Sources. Fairchild is committed to combat this global problem and encourage our customers to do their part in stopping this practice by buying direct or from authorized distributors.

PRODUCT STATUS DEFINITIONS

Definition of Terms

Datasheet Identification	Product Status	Definition
Advance Information	Formative / In Design	Datasheet contains the design specifications for product development. Specifications may change in any manner without notice.
Preliminary	First Production	Datasheet contains preliminary data; supplementary data will be published at a later date. Fairchild Semiconductor reserves the right to make changes at any time without notice to improve design.
No Identification Needed	Full Production	Datasheet contains final specifications. Fairchild Semiconductor reserves the right to make changes at any time without notice to improve the design.
Obsolete	Not In Production	Datasheet contains specifications on a product that is discontinued by Fairchild Semiconductor. The datasheet is for reference information only.

Rev. I66

Downloaded from Arrow.com.

ON Semiconductor and ON are trademarks of Semiconductor Components Industries, LLC dba ON Semiconductor or its subsidiaries in the United States and/or other countries. ON Semiconductor owns the rights to a number of patents, trademarks, copyrights, trade secrets, and other intellectual property. A listing of ON Semiconductor's product/patent coverage may be accessed at www.onsemi.com/site/pdf/Patent−Marking.pdf. ON Semiconductor reserves the right to make changes without further notice to any products herein. ON Semiconductor makes no warranty, representation or guarantee regarding the suitability of its products for any particular purpose, nor does ON Semiconductor assume any liability arising out of the application or use of any product or circuit, and specifically disclaims any and all liability, including without limitation special, consequential or incidental damages. Buyer is responsible for its products and applications using ON Semiconductor products, including compliance with all laws, regulations and safety requirements or standards, regardless of any support or applications information provided by ON Semiconductor. "Typical" parameters which may be provided in ON Semiconductor data sheets and/or specifications can and do vary in different applications and actual performance may vary over time. All operating parameters, including "Typicals" must be validated for each customer application by customer's technical experts. ON Semiconductor does not convey any license under its patent rights nor the rights of others. ON Semiconductor products are not designed, intended, or authorized for use as a critical component in life support systems or any FDA Class 3 medical devices or medical devices with a same or similar classification in a foreign jurisdiction or any devices intended for implantation in the human body. Should Buyer purchase or use ON Semiconductor products for any such unintended or unauthorized application, Buyer shall indemnify and hold ON Semiconductor and its officers, employees, subsidiaries, affiliates, and distributors harmless against all claims, costs, damages, and expenses, and reasonable attorney fees arising out of, directly or indirectly, any claim of personal injury or death associated with such unintended or unauthorized use, even if such claim alleges that ON Semiconductor was negligent regarding the design or manufacture of the part. ON Semiconductor is an Equal Opportunity/Affirmative Action Employer. This literature is subject to all applicable copyright laws and is not for resale in any manner.

PUBLICATION ORDERING INFORMATION

LITERATURE FULFILLMENT:
Literature Distribution Center for ON Semiconductor
19521 E. 32nd Pkwy, Aurora, Colorado 80011 USA
Phone: 303−675−2175 or 800−344−3860 Toll Free USA/Canada
Fax: 303−675−2176 or 800−344−3867 Toll Free USA/Canada
Email: orderlit@onsemi.com

N. American Technical Support: 800−282−9855 Toll Free USA/Canada
Europe, Middle East and Africa Technical Support:
Phone: 421 33 790 2910
Japan Customer Focus Center
Phone: 81−3−5817−1050

ON Semiconductor Website: **www.onsemi.com**

Order Literature: http://www.onsemi.com/orderlit

For additional information, please contact your local Sales Representative

Downloaded from Arrow.com.