# TRACO POWER

## DC/DC Railway Converter

## TEQ 20WIR Series, 20 Watt

- **High power block with excellent thermal convection**
- **Operating temperature -40°C to +93°C**
- **Ultra wide 4:1 input voltage range**
- **EN 50155 approval for railway applications**
- **Excellent efficiency up to 88%**
- **Input filter meet EN 55032 class B**
- **I/O isolation up to 1591 VAC**
- **Under voltage lock-out circuit**
- **Protection against overvoltage, overtemperature and short circuit**
- **Output LED indicator**
- **3-year product warranty**

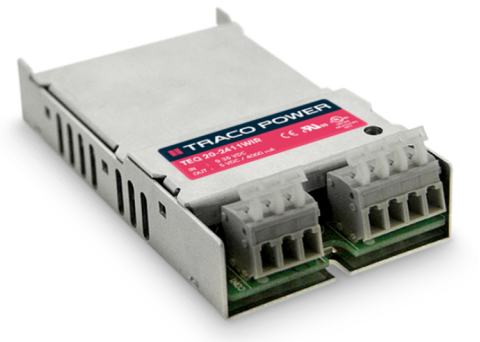


UL 62368-1 IEC 62368-1

The TEQ 20WIR Series is a family of isolated high performance DC/DC converter modules with ultra-wide 4:1 input voltage ranges which come in a rugged metal case. These converters are suitable for a wide range of applications, but the product is designed particularly also for industrial applications where often no PCB mounting is possible but the module has to be mounted on a chassis. A very high efficiency and the heatsink construction allows an operating temperature up to +83°C with natural convection cooling without power derating and up to +93°C with power derating. Further features include under voltage lockout, over temperature protection and short circuit protection.

## Models

| Order Code | Input Voltage Range | Output 1 Vnom | Output 1 Imax | Output 2 Vnom | Output 2 Imax | Efficiency typ. |
|---|---|---|---|---|---|---|
| **TEQ 20-2411WIR** | 9 - 36 VDC (24 VDC nom.) | 5 VDC | 4'000 mA | | | 87 % |
| **TEQ 20-2412WIR** | | 12 VDC | 1'670 mA | | | 88 % |
| **TEQ 20-2413WIR** | | 15 VDC | 1'330 mA | | | 87 % |
| **TEQ 20-2415WIR** | | 24 VDC | 833 mA | | | 87 % |
| **TEQ 20-2422WIR** | | +12 VDC | 833 mA | −12 VDC | 833 mA | 87 % |
| **TEQ 20-2423WIR** | | +15 VDC | 667 mA | −15 VDC | 667 mA | 88 % |
| **TEQ 20-4811WIR** | 18 - 75 VDC (48 VDC nom.) | 5 VDC | 4'000 mA | | | 87 % |
| **TEQ 20-4812WIR** | | 12 VDC | 1'670 mA | | | 88 % |
| **TEQ 20-4813WIR** | | 15 VDC | 1'330 mA | | | 88 % |
| **TEQ 20-4815WIR** | | 24 VDC | 833 mA | | | 87 % |
| **TEQ 20-4822WIR** | | +12 VDC | 833 mA | −12 VDC | 833 mA | 87 % |
| **TEQ 20-4823WIR** | | +15 VDC | 667 mA | −15 VDC | 667 mA | 88 % |
| **TEQ 20-7211WIR** | 43 - 160 VDC (110 VDC nom.) | 5 VDC | 4'000 mA | | | 86 % |
| **TEQ 20-7212WIR** | | 12 VDC | 1'670 mA | | | 87 % |
| **TEQ 20-7213WIR** | | 15 VDC | 1'330 mA | | | 87 % |
| **TEQ 20-7215WIR** | | 24 VDC | 833 mA | | | 87 % |
| **TEQ 20-7222WIR** | | +12 VDC | 833 mA | −12 VDC | 833 mA | 87 % |
| **TEQ 20-7223WIR** | | +15 VDC | 667 mA | −15 VDC | 667 mA | 88 % |




Downloaded from Arrow.com.

## Input Specifications

| | | | |
|---|---|---|---|
| Input Current | - At no load | 24 Vin models: | 10 mA typ. |
| | | 48 Vin models: | 8 mA typ. |
| | | 110 Vin models: | 6 mA typ. |
| Surge Voltage | | 24 Vin models: | 50 VDC max. (1 s max.) |
| | | 48 Vin models: | 100 VDC max. (1 s max.) |
| | | 110 Vin models: | 170 VDC max. (1 s max.) |
| Under Voltage Lockout | | 24 Vin models: | 7 VDC min. / 8 VDC typ. / 8.8 VDC max. |
| | | 48 Vin models: | 15 VDC min. / 16 VDC typ. / 17.5 VDC max. |
| | | 110 Vin models: | 37 VDC min. / 40 VDC typ. / 42 VDC max. |
| Input Protection | | | T 6.3 A / 250 VAC<br>(Internal Fuse in +Vin, 24 Vin models)<br>T 3.15 A / 250 VAC<br>(Internal Fuse in +Vin, 48 & 110 Vin models) |
| Recommended Input Fuse | | 24 Vin models: | 4'000 mA (slow blow) |
| | | 48 Vin models: | 2'000 mA (slow blow) |
| | | 110 Vin models: | 1'000 mA (slow blow)<br>(The need of an external fuse has to be assessed in the final application.) |
| Reverse Voltage Protection | | | Parallel diode |

## Output Specifications

| | | | |
|---|---|---|---|
| Voltage Set Accuracy | | | ±1% max. (Single Output)<br>+1% / -1.2% (Dual Output) |
| Regulation | - Input Variation (Vmin - Vmax) | single output models: | 0.5% max. |
| | | dual output models: | 0.5% max. |
| | - Load Variation (0 - 100%) | single output models: | 1.5% max. (5 VDC models)<br>1% max. (other models) |
| | | dual output models: | 1% max. (Output 1)<br>1% max. (Output 2) |
| | - Cross Regulation (25% / 100% asym. load) | dual output models: | 5% max. |
| Ripple and Noise (20 MHz Bandwidth) | - single output | 5 Vout models: | 75 mVp-p max. |
| | | 12 Vout models: | 100 mVp-p max. |
| | | 15 Vout models: | 100 mVp-p max. |
| | | 24 Vout models: | 150 mVp-p max. |
| | - dual output | 12 / -12 Vout models: | 100 / 100 mVp-p max. |
| | | 15 / -15 Vout models: | 100 / 100 mVp-p max. |
| Capacitive Load | - single output | 5 Vout models: | 5'000 µF max. |
| | | 12 Vout models: | 850 µF max. |
| | | 15 Vout models: | 700 µF max. |
| | | 24 Vout models: | 250 µF max. |
| | - dual output | 12 / -12 Vout models: | 500 / 500 µF max. |
| | | 15 / -15 Vout models: | 350 / 350 µF max. |
| Minimum Load | | | Not required |
| Temperature Coefficient | | | ±0.02 %/K max. |
| Hold-up Time | | | 10 ms min. (acc. EN50155 class S2, without external components) |
| Start-up Time | | | 100 ms typ. |
| Short Circuit Protection | | | Continuous, Automatic recovery |
| Output Current Limitation | | | 150% typ. of Iout max. |
| Overvoltage Protection | | | 125% typ. of Vout nom. |
| Transient Response | - Response Time | | 250 µs typ. (25% Load Step) |

All specifications valid at nominal voltage, resistive full load and +25°C after warm-up time, unless otherwise stated.



Downloaded from Arrow.com.

## Safety Specifications

| | | |
|---|---|---|
| Standards | - IT / Multimedia Equipment | EN 60950-1<br>EN 62368-1<br>IEC 60950-1<br>IEC 62368-1<br>UL 60950-1<br>UL 62368-1 |
| | - Industrial Control Equipment | Designed for UL 508 (no certification)<br>(single output models only) |
| | - Railway Applications | EN 50155 |
| | - Certification Documents | www.tracopower.com/teq20wir-safety-cert |
| Energy Source | - Output, acc. to 62368-1 | ES1 |
| Power Source | - Output, acc. to 62368-1 | PS3 |
| Pollution Degree | | PD 2 |
| Over Voltage Category | | Not mains connected |

## EMC Specifications

| | | |
|---|---|---|
| EMI (Emissions) | | EN 50121-3-2 (EMC for Rolling Stock) |
| | - Conducted Emissions | EN 55032 class A (internal filter)<br>EN 55032 class B (internal filter) |
| | - Radiated Emissions | EN 55032 class A (internal filter)<br>EN 55032 class B (internal filter) |
| EMS (Immunity) | | EN 50121-3-2 (EMC for Rolling Stock)<br>EN 55024 (IT Equipment)<br>EN 55035 (Multimedia) |
| | - Electrostatic Discharge | Air: EN 61000-4-2, ±8 kV, perf. criteria A<br>Contact: EN 61000-4-2, ±6 kV, perf. criteria A |
| | - RF Electromagnetic Field | EN 61000-4-3, 20 V/m, perf. criteria A |
| | - EFT (Burst) / Surge | EN 61000-4-4, ±2 kV, perf. criteria A<br>EN 61000-4-5, ±1 kV, perf. criteria A |
| | - Conducted RF Disturbances | EN 61000-4-6, 10 Vrms, perf. criteria A |
| | - PF Magnetic Field | Continuous: EN 61000-4-8, 100 A/m, perf. criteria A<br>1 s: EN 61000-4-8, 1000 A/m, perf. criteria A |
| EMC / Environmental | - Certification Documents | www.tracopower.com/teq20wir-emc-cert |

## General Specifications

| | | |
|---|---|---|
| Relative Humidity | | 95% max. (non condensing) |
| Temperature Ranges | - Operating Temperature | −40°C to +93°C |
| | - Storage Temperature | −40°C to +105°C |
| Power Derating | - High Temperature | Depending on model |
| | See application note: | www.tracopower.com/teq20wir-cc |
| Cooling System | | Natural convection (20 LFM) |
| Altitude During Operation | | 2'000 m max. |
| Switching Frequency | | 297 - 363 kHz (PWM)<br>330 kHz typ. (PWM) |
| Insulation System | | Functional Insulation |
| Isolation Test Voltage | - Input to Output, 60 s | 2'250 VDC |
| | - Input to Case, 60 s | 1'600 VDC |
| | - Output to Case, 60 s | 1'600 VDC |
| Isolation Resistance | - Input to Output, 500 VDC | 1'000 MΩ min. |
| Isolation Capacitance | - Input to Output, 100 kHz, 1 V | 6'000 pF typ. |
| Reliability | - Calculated MTBF | 1'600'000 h (MIL-HDBK-217F, ground benign) |

All specifications valid at nominal voltage, resistive full load and +25°C after warm-up time, unless otherwise stated.



Downloaded from Arrow.com.

| | | |
|---|---|---|
| Environment | - Vibration | MIL-STD-810F<br>EN 61373 |
| | - Mechanical Shock | MIL-STD-810F<br>EN 61373 |
| | - Thermal Shock | MIL-STD-810F |
| | - Flammability | EN 45545-2<br>www.tracopower.com/info/en45545-declaration.pdf |
| Housing Material | | Aluminum |
| Housing Type | | Metal Case |
| Mounting Type | | Chassis Mount |
| Connection Type | | Spring Clamps |
| Weight | | 122 g |
| Status Indicator | | Indicated by green LED |
| Environmental Compliance | - REACH Declaration | www.tracopower.com/info/reach-declaration.pdf<br>REACH SVHC list compliant<br>REACH Annex XVII compliant |
| | - RoHS Declaration | www.tracopower.com/info/rohs-declaration.pdf<br>Exemptions: 7(a), 7(c)-I<br>(RoHS exemptions refer to the component concentration only, not to the overall concentration in the product (O5A rule).) |
| | - SCIP Reference Number | 3ad2da4c-14d8-4a79-a38b-1b0447f15324 |

## Additional Information

| | |
|---|---|
| Supporting Documents | www.tracopower.com/overview/teq20wir |
| Frequently Asked Questions | www.tracopower.com/glossary-faq |
| Glossary | www.tracopower.com/info/glossary.pdf |
| Service Portal | www.tracoserviceportal.com |

All specifications valid at nominal voltage, resistive full load and +25°C after warm-up time, unless otherwise stated.



Downloaded from Arrow.com.

## Outline Dimensions

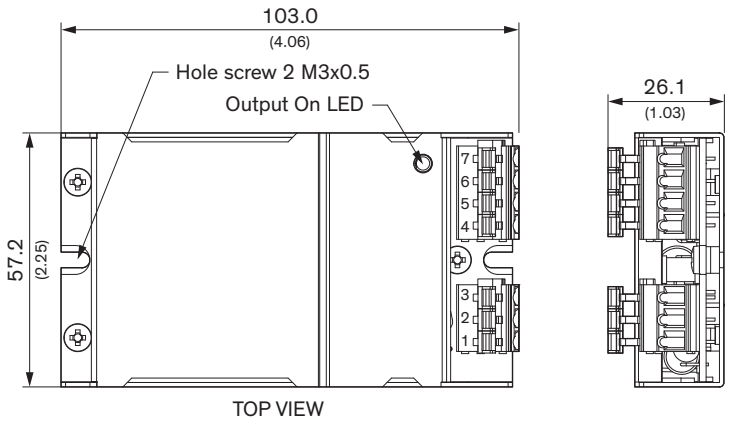


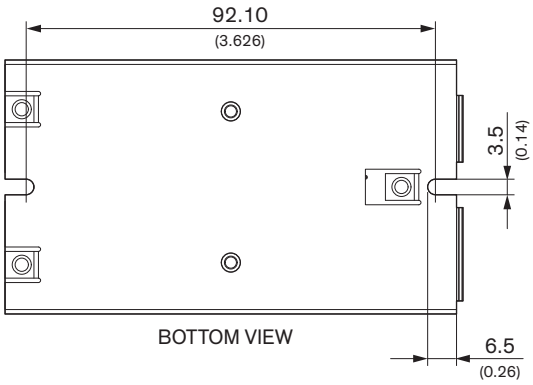


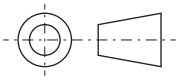

Dimensions in mm, ( ) = inch
Tolerances: x.x ±0.5 (±0.02)
x.xx ±0.25 (±0.01)
Screw max. torque: 5.0 kgf - cm (0.49 Nm)

### Terminal connection

| Pin | Single Output | Dual Output |
|---|---|---|
| 1 | +Vin | +Vin |
| 2 | –Vin (GND) | –Vin (GND) |
| 3 | NC | NC |
| 4 | NC | –Vout |
| 5 | –Vout | Common |
| 6 | +Vout | Common |
| 7 | NC | +Vout |

NC: Not connected

Wire dimension: AWG 12 max.

Note: The size of the wires has to be assessed in the final application.

© Copyright 2026 Traco Electronic AG


Downloaded from Arrow.com.