FLLD3055AMHT5

Aliases (LLD3055AMHT5)

Obsolete

EMI Filters, KEMET, FLLD3-MH, Chassis Mount, Noise Suppression, 220x85x90mm

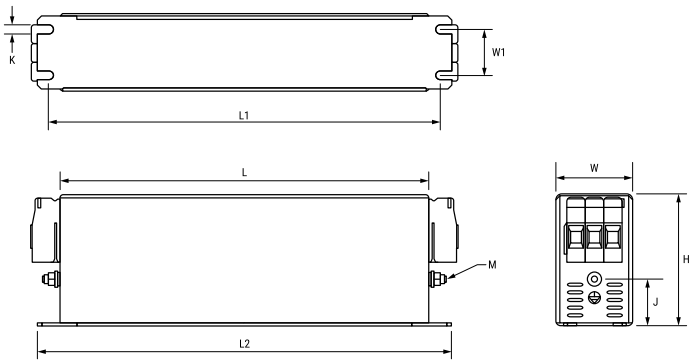

Click here for the 3D model.

General Information	
Series	FLLD3-MH
Style	Chassis Mount
Description	EMI Filter, Chassis Mount, Motor Drives
Features	Three Phase, High Performance, High Voltage
Phase	Three-phase
RoHS	Yes
Qualifications	IEC/EN 60939, UL 1283
Lead	Threaded Studs M6
Terminal Type	Threaded Studs M6

Dimensions	
L	220mm NOM
W	85mm NOM
H	90mm NOM
L1	235mm NOM
L2	250mm NOM
W1	60mm NOM
J	26mm NOM
K	5.5mm NOM
M (Earth)	Threaded Studs M6
Lead	Threaded Studs M6

Packaging Specifications	
Packaging	Bulk
Packaging Quantity	1
Typical Component Weight	2,000 g

Specifications	
Voltage AC	530 VAC, 305 VAC
Rated Frequency	50-60 Hz
Rated Current	55 A (50°C)
Ripple Current	55 A (50°C)
Rated Temperature	50°C
Temperature Range	-25/+100°C
Climate Category	25/100/21
Test Voltage DC (P to P)	2250 VDC
Test Voltage DC (P to E)	3000 VDC
Max Power Loss	20 W (25°C 50 Hz)
Leakage Current	4.7 mA

Statements of suitability for certain applications are based on our knowledge of typical operating conditions for such applications, but are not intended to constitute - and we specifically disclaim - any warranty concerning suitability for a specific customer application or use. This Information is intended for use only by customers who have the requisite experience and capability to determine the correct products for their application. Any technical advice inferred from this Information or otherwise provided by us with reference to the use of our products is given gratis, and we assume no obligation or liability for the advice given or results obtained.

© 2006 - 2026 YAGEO

Downloaded from Arrow.com.