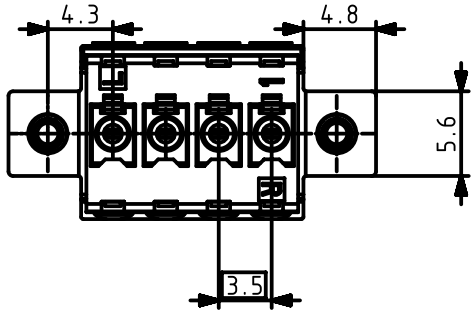

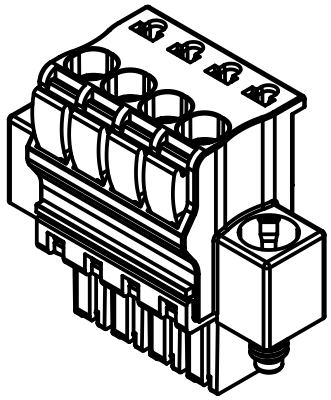

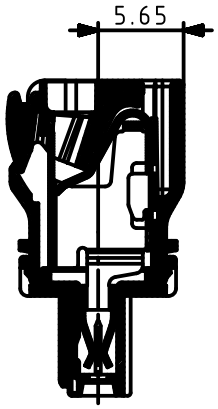

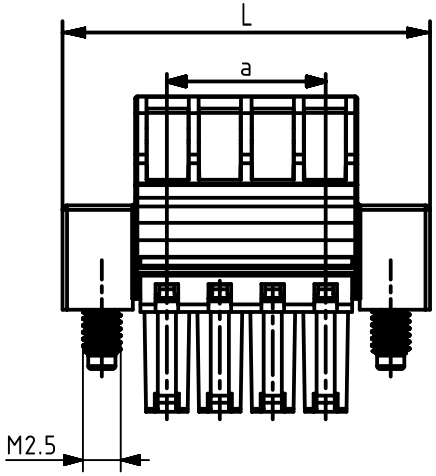

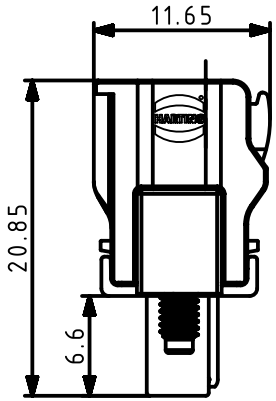

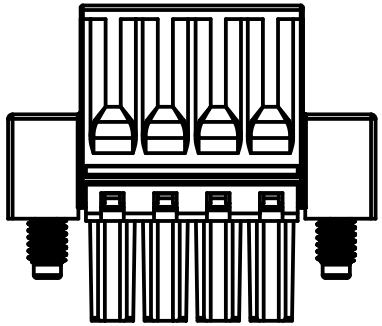

Part Number	Poles	Dim. a	Dim. L
14310214106000	2	3.5	17.3
14310314106000	3	7	20.8
14310414106000	4	10.5	24.3
14310514106000	5	14	27.8
14310614106000	6	17.5	31.3
14310714106000	7	21	34.8
14310814106000	8	24.5	38.3
14310914106000	9	28	41.8
14311014106000	10	31.5	45.3
14311114106000	11	35	48.8
14311214106000	12	38.5	52.3
14311314106000	13	42	55.8
14311414106000	14	45.5	59.3
14311514106000	15	49	62.8
14311614106000	16	52.5	66.3
14311714106000	17	56	69.8
14311814106000	18	59.5	73.3
14311914106000	19	63	76.8
14312014106000	20	66.5	80.3
14312114106000	21	70	83.8
14312214106000	22	73.5	87.3
14312314106000	23	77	90.8

further information see DS 14312302001

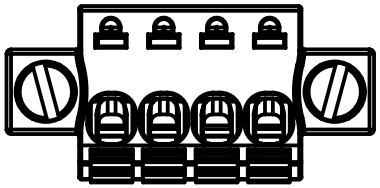

All Dimensions in mm
Original Size DIN A4

Scale 2:1

Free size tol.

Ref.

Sub.

All rights reserved

Department EC PD - DE

HARTING Electronics GmbH
D-32339 Espelkamp

Created by	Inspected by	Standardisation	Date	State
KAHLERK	TADJE	HOFFMANN	2015-10-06	Final Release

Title: har-flexicon 3.50 FPH-XX BXXX GN SL

Doc-Key / ECM-Nr.
100610743/UGD/000/B
500000093942

Type: TB

Number: 1431XX14106000

Rev. B

Page 1/1

A4

Downloaded from Arrow.com.