Connector Location A

Connector Location B

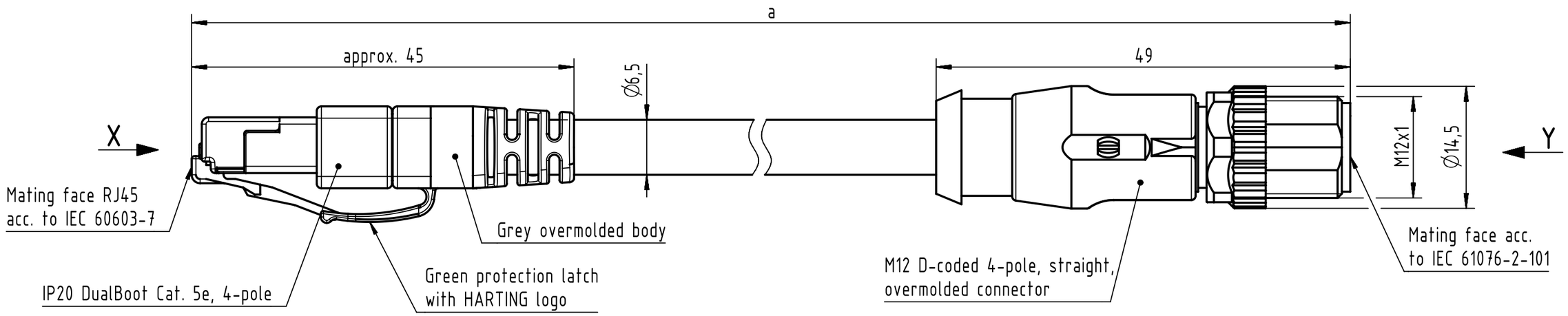

X
male

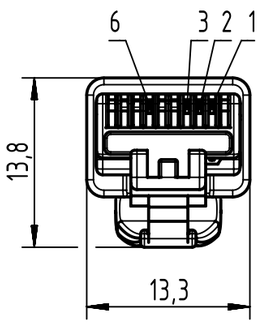

Loading-Plan:

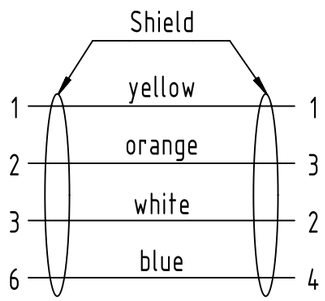

Y
male

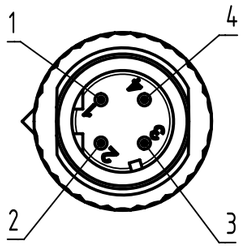

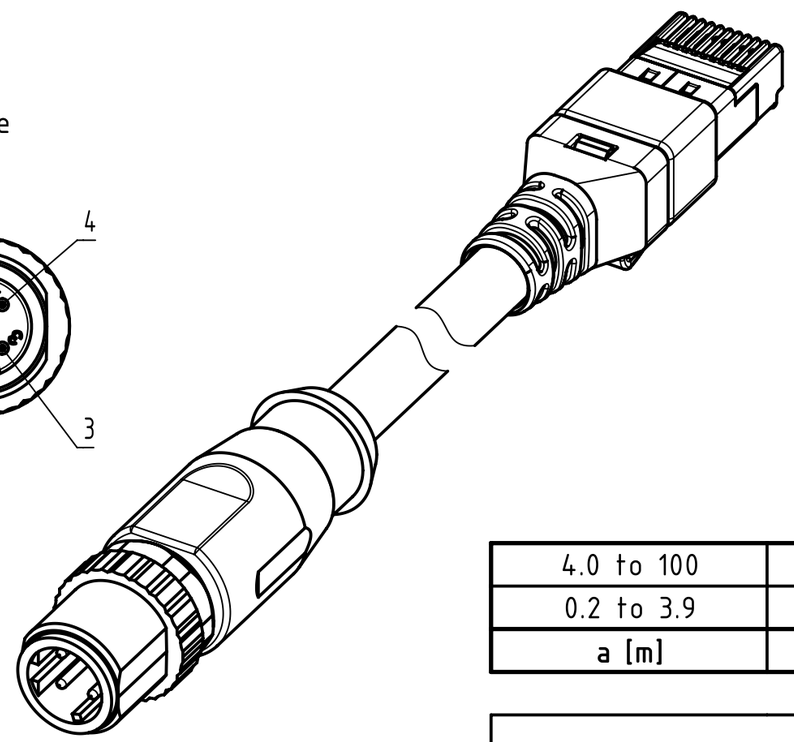

length in "1m" step	100	XXX=000
	99	XXX=990
	⋮	⋮
	12	XXX=120
	11	XXX=110
length in "0.1m" step	10	XXX=100
	9.9	XXX=099
	9.8	XXX=098
	⋮	⋮
	0.5	XXX=005
	0.4	XXX=004
	0.3	XXX=003
	0.2	XXX=002
Step	**a [m]**	**XXX**

4.0 to 100	±1%
0.2 to 3.9	+0.04
a [m]	**Tolerance**

PUR, green, 2x2xAWG22	09486896018XXX
Type of cable	**Part no.**

NOTE:

For lengths < 1.0m:

- relative positioning of the connectors to each other shall be as presented in the drawing, however with an admissible angular deviation around cable axis of ± 30°

For lengths ≥ 1.0m:

-relative positioning of the connectors to each other not obligatory

- Temperature range: -25°C ... +60°C

All Dimensions in mm	Tech. Character.	Free size tol.		According to production drawing
All rights reserved	Created by COSTEA	Inspected by STOCHECIC	Standardisation MUNTEANV	Date 2018-10-12	State Final Release
Department HCS - RO	Title RJ45 -M12 D-COD st/st m/m PUR			Doc-Key / ECM-Nr. 100802383/UGD/045/A 500000141236
HARTING Customised Solutions D-32339 Espelkamp	Type TB	Number 09486896018XXX	Rev. A	Page 1/1

Downloaded from Arrow.com.

A3