ADVANCE by signify

LED Driver

Xitanium

XI180C125V200BSF2

Long-lasting and low maintenance, LED-based light sources are an excellent solution for all lighting applications. For optimal performance, these solutions require reliable drivers matching the long lifetime of the LEDs. The **Advance Xitanium LED outdoor driver** portfolio offers a range of products specially designed to operate LED solutions in outdoor applications. These drivers are designed for hard-wired integration into outdoor luminaires for the most rugged applications. They operate to specification under wide temperature and electrical ranges to ensure reliability.

Specifications

Input Voltage (Vac)	Output Power (W)	Output Voltage (V)	Output Current (A)	Efficiency @ Max Load and 75°C Case	Max Case Temp. (°C)	Input Current (A)	Max. Input Power (W)	THD @ Max Load (%)	Power Factor @ Max Load	Surge Protection (Combi-Wave, KV)	Envir. Protection Rating	Dimming	Dimming Range (with specified dimmers)	Min. Output Current (A)	Driver Type
120	180	70 - 210	0.1A -1.25A	91	Life - 85°C UL - 90°C	1.67	200	<10%	>0.95	6	UL damp & dry and Type HL	0-10V Analog Class 1 and 2 Wiring	10% ~ 100%	0.07	Constant Current
277				94		0.72									

Enclosure

	In. (mm)	Tolerance (mm)
Overall Length (A1)	9.47 (240.5)	± 0.5mm
Mounting Length (A2)	8.91 (226.2)	± 0.5mm
Case Length (A3)	8.31 (211)	± 0.5mm
Case Width (B1)	2.31 (58.6)	± 0.5mm
Mounting Width (B2)	1.69 (42.9)	± 0.5mm
Case Height (C1)	1.48 (37.6)	± 1.0mm
Mounting Hole Diameter (D1)	0.23 (5.9)	± 0.5mm
Mounting Hole Diameter (D2)	0.31 (7.9)	± 0.5mm
Center of SimpleSet Antenna (G1)	3.77 (95.8)	± 3.0mm

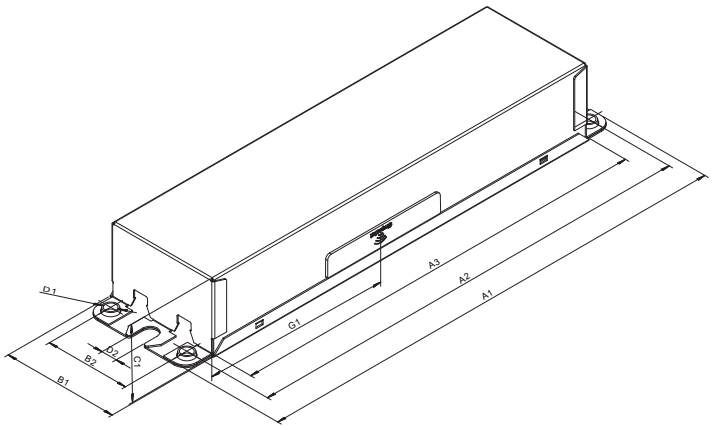

Wiring Diagram

	Wire Length (mm)
Black (Line)	270 (± 30)
White (Neutral)	270 (± 30)
Red (Positive, LED output)	270 (± 30)
Blue (Negative, LED output)	270 (± 30)
Violet (Positive, 0-10V)	270 (± 30)
Pink* (Negative, 0-10V)	270 (± 30)

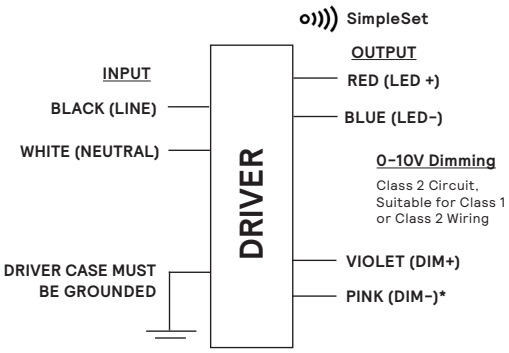

*DIM- will change from GREY to PINK from 2021 onwards.

Warning

- Install in accordance with national and local electrical codes.
- The field-wiring leads or push-in terminals shall be fully enclosed.

RoHS COMPLIANT c UL us LISTED NOM

Downloaded from Arrow.com.

Xitanium XI180C125V200BSF2

180W 0.1–1.25A 0–10V Dimming

Features

- 50,000+ hour lifetime[1]
- Excellent thermal performance
- 0–10V Dimming suitable for UL Class 1 and Class 2 wiring

Benefits

- Enables long life luminaire designs
- Allows luminaire designs for a wide range of ambient environments

Application

- Area
- Roadway
- Parking garages
- Floodlights

Electrical Specifications

All the specifications are typical and at 25°C Ta unless specified otherwise.

Product Data

Order Information	
Full Product Code	XI180C125V200BSF2M (Mid-Pack, 10pcs/Box), 12NC: 929001782813
Line Frequency	50/60Hz
Min. Mains Voltage Operational	108 Vac
Max. Mains Voltage Operational	305 Vac
DC Input Voltage	125/250Vdc An additional EMC filter may be necessary for the product to comply with FCC Part 15 class A limit at DC Mains operation.
Output Information	
Maximum Open Circuit Voltage	285Vdc
Output Current Ripple (ripple = peak to average / average)	15% max @ max Iout (Low frequency ripple (≤120Hz) content <5%)
Output Current Tolerance (in the performance window)	<5%
Protections	Short Circuit, Open Circuit Protection for LED + and LED – and Temperature Foldback
Features	
0–10V Dimming	150µA (±3%) source current from driver. See dim curve for detail.
AOC (Adjustable Output Current)	0.1A–1.25A via SimpleSet (Factory Default at 1.05A)
Additional SimpleSet Configurable Features	Adjustable Startup Time Constant Lumen Over Lifetime Diagnostics Mains Limit Protection Driver Thermal Limit Advanced Dynadimmer
Environment & Approbation	
Operating Ambient Temp. Range	-40°C to +55°C
Max Case Temperature (Tcase)	85°C for Life & 90°C for UL Safety
Agency Approbations	UL 8750, NOM, cUL, Class P (UL, cUL)
Electromagnetic Compliance	FCC Title 47 Part 15 Class A
Audible Noise	<24dB Class A
Weight	2.1 Lbs / 0.95 kgs

1. Advance Xitanium LED drivers are manufactured to engineering standards correlating to a designed and average life expectancy of 50,000 hours of operation at maximum rated case temperature. Minimum 90% survivals based on MTTF modeling.

Downloaded from Arrow.com.

Xitanium XI180C125V200BSF2

180W 0.1–1.25A 0–10V Dimming

Electrical Specifications

All the specifications are typical and at 25°C Ta unless specified otherwise.

0–10V Dimming Curve

- Dimming source current from the driver: 150µA (@ 0<Vdim<8V)
- Minimum dim level: Factory default 10% of Iout setting as default
- Maximum output voltage on the dimming wires: 12V
- Leakage current of dimming leads: 0.010mA, recommended max number of control circuits in parallel refer to Design-in Guide

Approved Dimmer List

Manufacturer	Manufacturer Part Number
Lutron	Visit www.lutron.com/advance for a list of dimmers (Mark VII) that will work with this driver
Leviton	IllumaTech IP7 series
Advance	Sunrise - SR1200ZTUNV

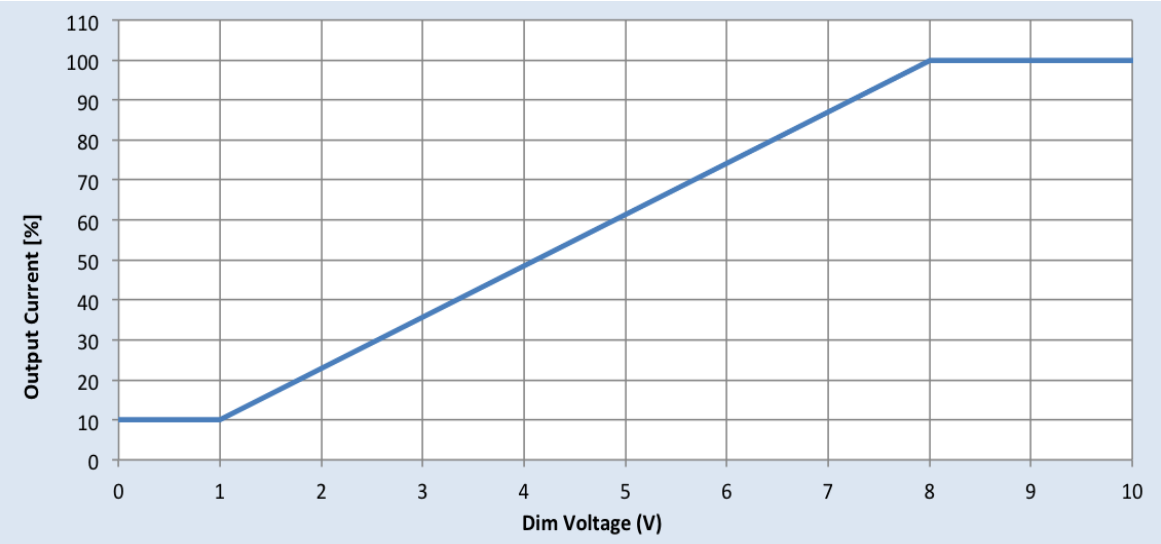

Downloaded from Arrow.com.

Xitanium XI180C125V200BSF2

180W 0.1-1.25A 0-10V Dimming

Electrical Specifications

All the specifications are typical and at 25°C Ta unless specified otherwise.

Driver Output Window

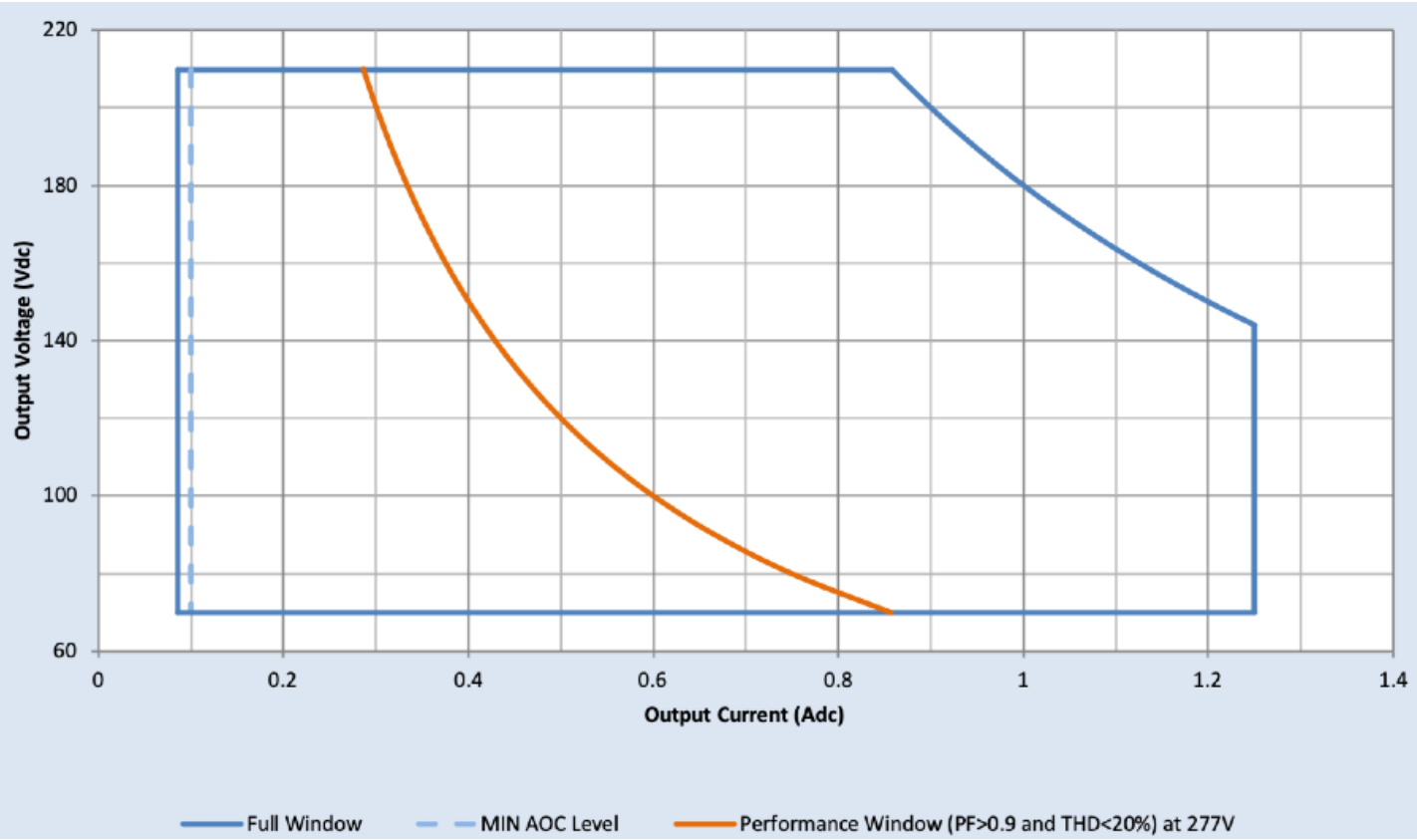

Notes

1. Factory default output current is 1.05A.
2. To get a 100% to 10% dimming range, the output current setting through AOC should be ≥ 0.7A.
3. Factory default minimum dimming level is 10%. This can be adjusted between 10% and 100% using Advance MultiOne.

Downloaded from Arrow.com.

Xitanium XI180C125V200BSF2

180W 0.1–1.25A 0–10V Dimming

Electrical Specifications

All the specifications are typical and at 25°C Ta unless specified otherwise.

Driver Lifetime vs. Driver Case Temperature

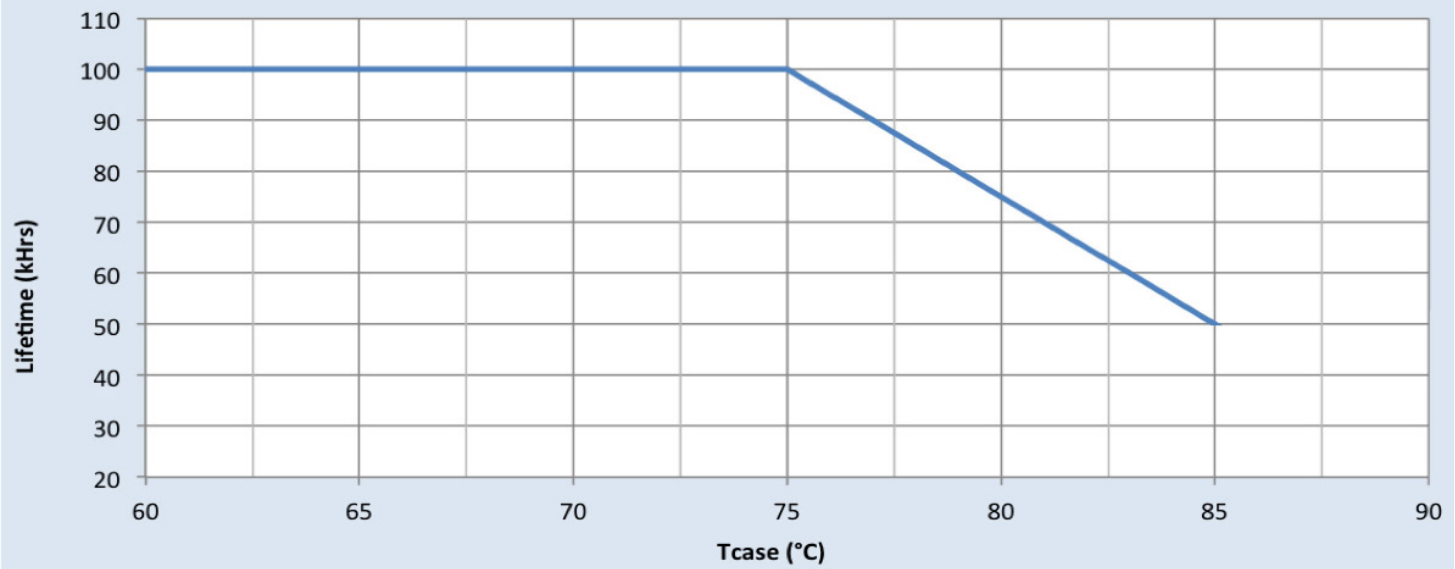

Downloaded from Arrow.com.

Xitanium XI180C125V200BSF2

180W 0.1–1.25A 0–10V Dimming

Performance Characteristics

Based on measurements on a typical sample at 70°C case. The accuracy of the measurements is within the tolerance of the measurement instruments.

Efficiency Vs. Output Voltage at 120Vac

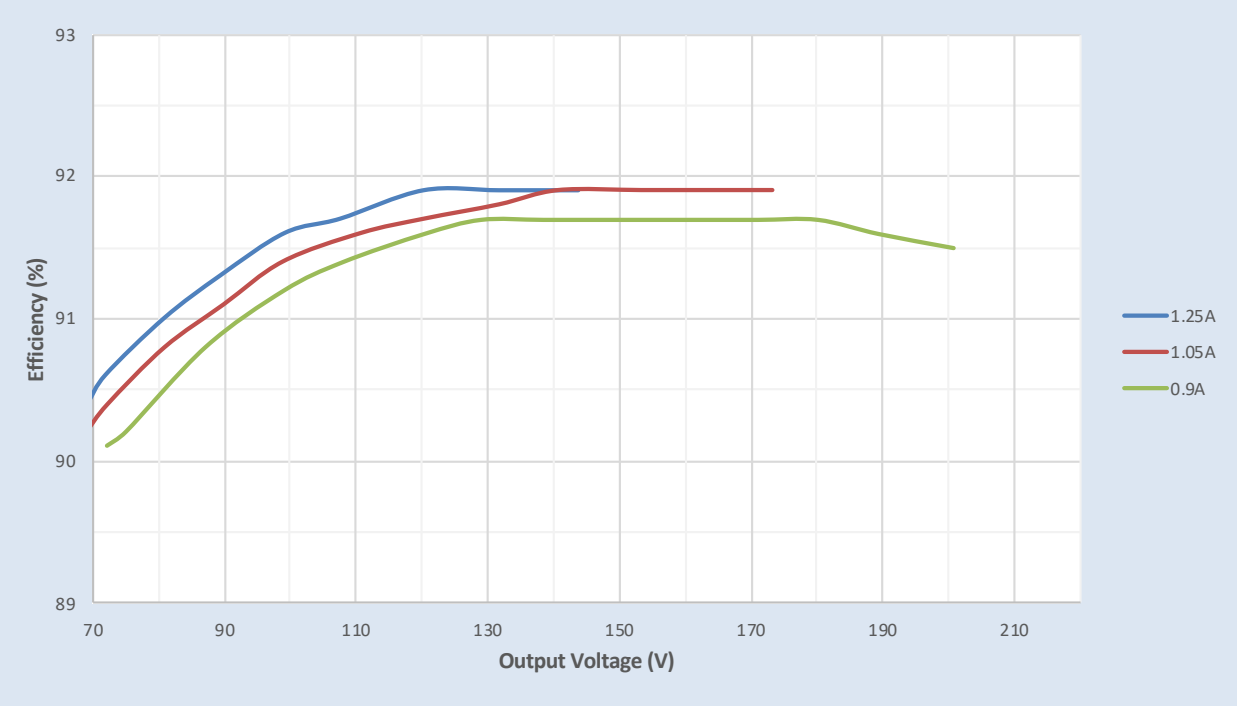

Efficiency Vs. Output Voltage at 277Vac

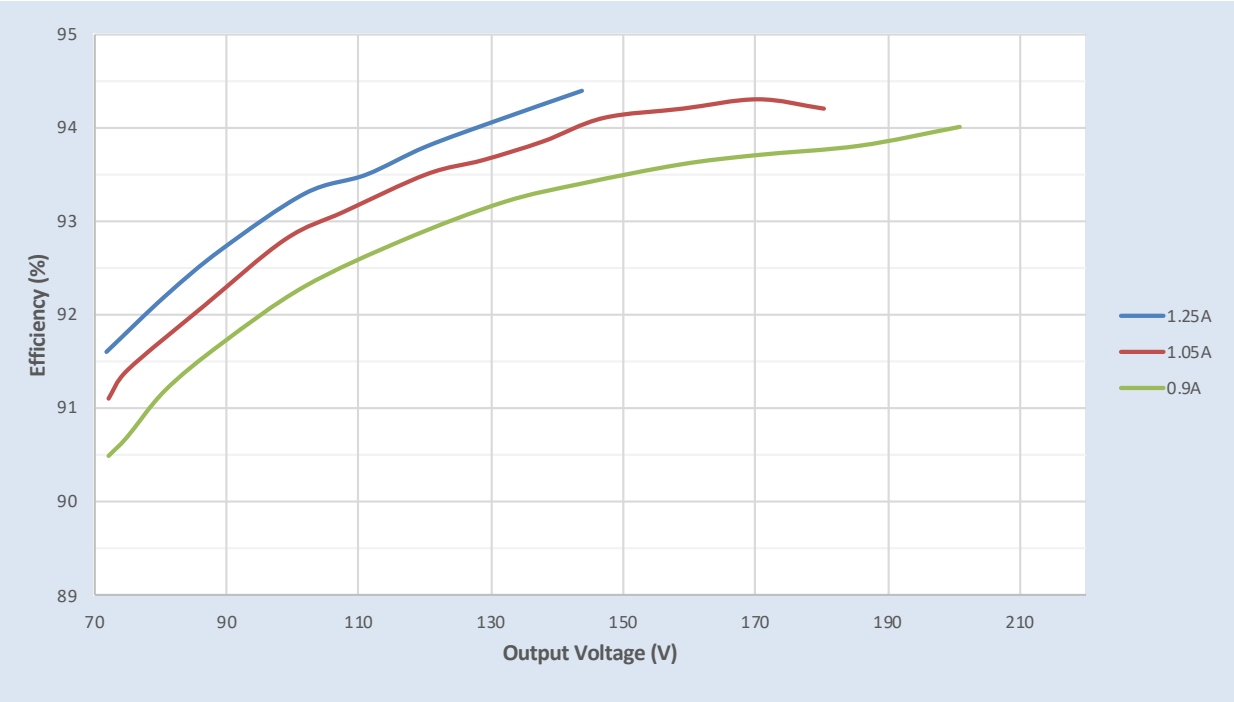

Downloaded from Arrow.com.

Xitanium XI180C125V200BSF2

180W 0.1-1.25A 0-10V Dimming

Performance Characteristics

Based on measurements on a typical sample at 70°C case. The accuracy of the measurements is within the tolerance of the measurement instruments.

Power Factor Vs. Output Power

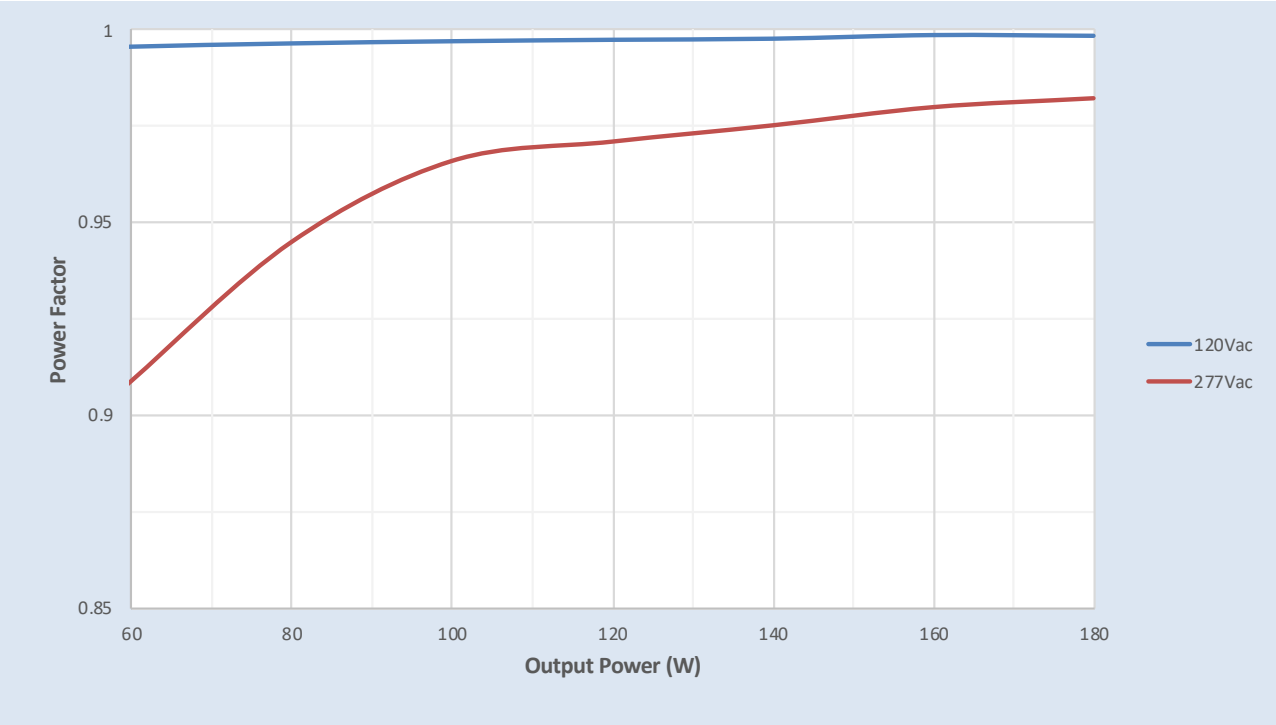

Total Harmonic Distortion (THD) Vs. Output Power

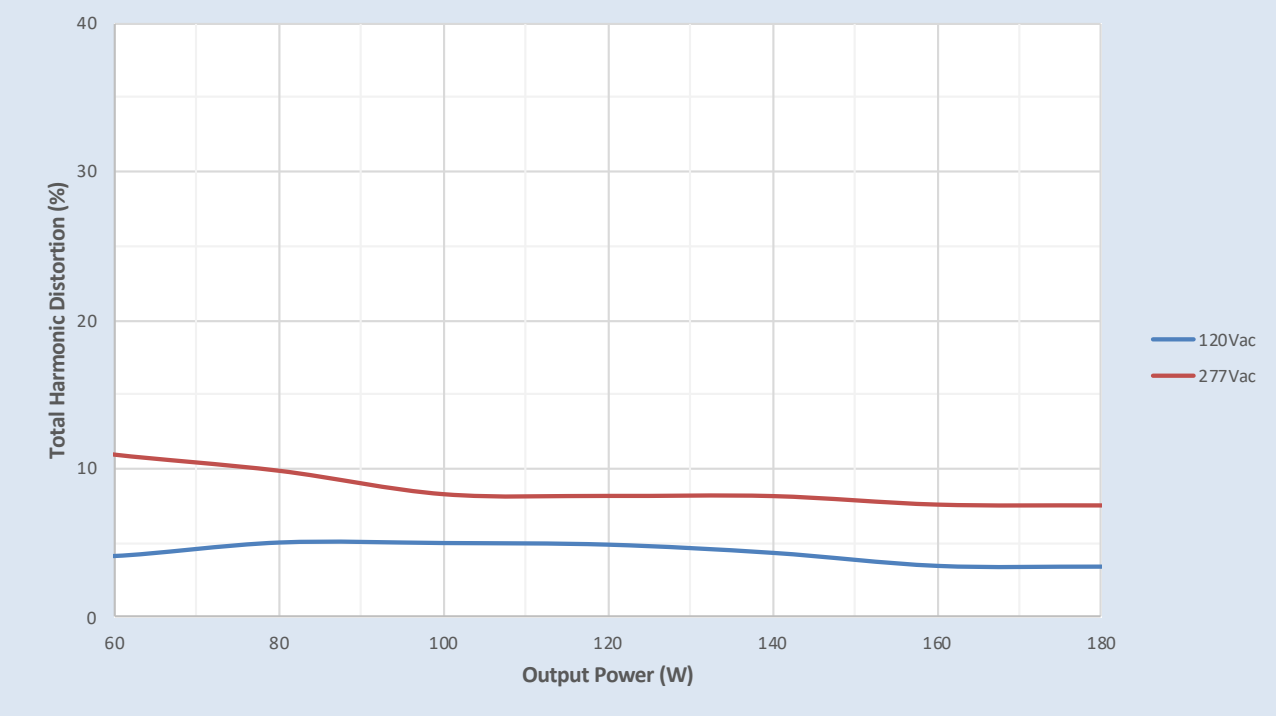

Downloaded from Arrow.com.

Xitanium XI180C125V200BSF2

180W 0.1–1.25A 0–10V Dimming

Inrush Current Info

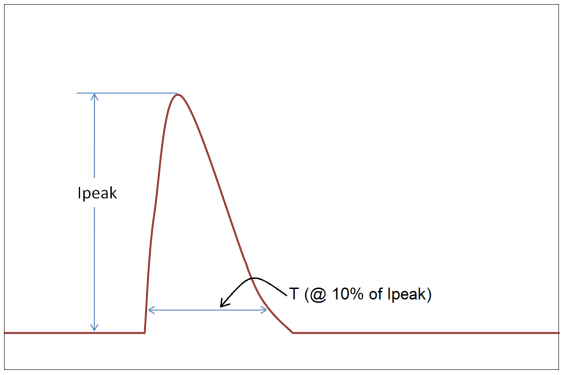

Vin	Ipeak	T (@ 10% of Ipeak)
120 Vrms	69A	160us
277 Vrms	151A	143us

Inrush current is measured at peak of the corresponding line voltage.
Source impedance per NEMA 410.

Lightning Surge Info

ANSI Surge Type	Differential Mode (L–N)	Common Mode (L–G, N–G, L&N–G)
1.2/50µs Combination Wave (w/t 2Ω)	6kV	6kV

Isolation

Isolation	Input	Output	0–10V	Enclosure
Input	NA	2xU+1kV	2xU+1kV	2xU+1kV
Output	2xU+1kV	NA	2xU+1kV	2xU+1kV
0–10V	2xU+1kV	2xU+1kV	NA	2xU+1kV
Enclosure	2xU+1kV	2xU+1kV	2xU+1kV	NA

U = Max. working voltage

The information presented in this document is not intended as any commercial offer and does not form part of any quotation or contract.

© 2022 Signify Holding. All rights reserved. The information provided herein is subject to change, without notice. Signify does not give any representation or warranty as to the accuracy or completeness of the information included herein and shall not be liable for any action in reliance thereon. The information presented in this document is not intended as any commercial offer and does not form part of any quotation or contract, unless otherwise agreed by Signify.

Signify North America Corporation
400 Crossing Blvd, Suite 600
Bridgewater, NJ 08807
Telephone: 855-486-2216

Signify Canada Ltd.
281 Hillmount Road,
Markham, ON, Canada L6C 2S3
Telephone: 800-668-9008

All trademarks are owned by Signify Holding or their respective owners.

Downloaded from Arrow.com.