Alle Rechte vorbehalten/ *All rights reserved*

Mating face according to MIL-C-24308 / DIN 41 652 / CECC 75301-802

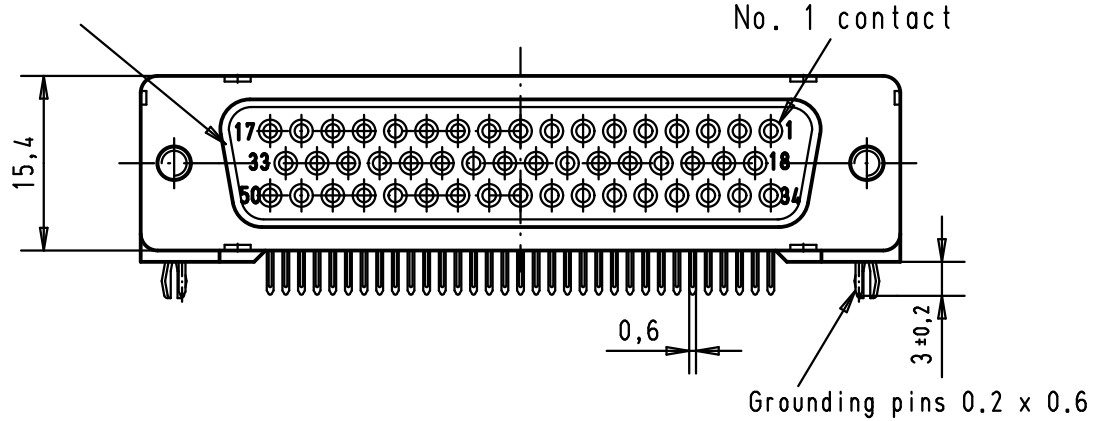

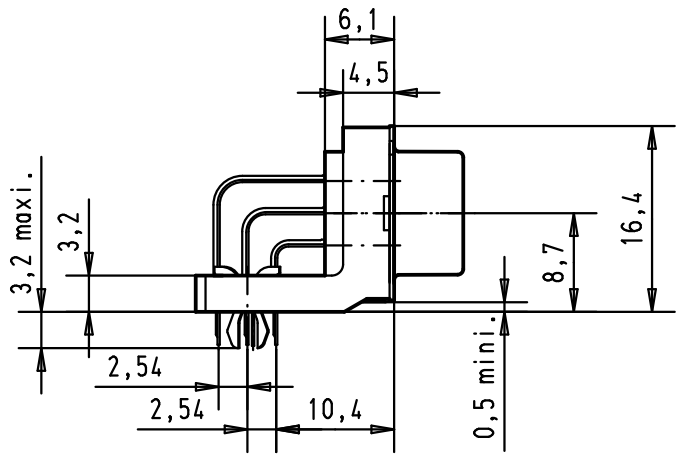

Printed board layout(1,6±0,2 thick)
View component side

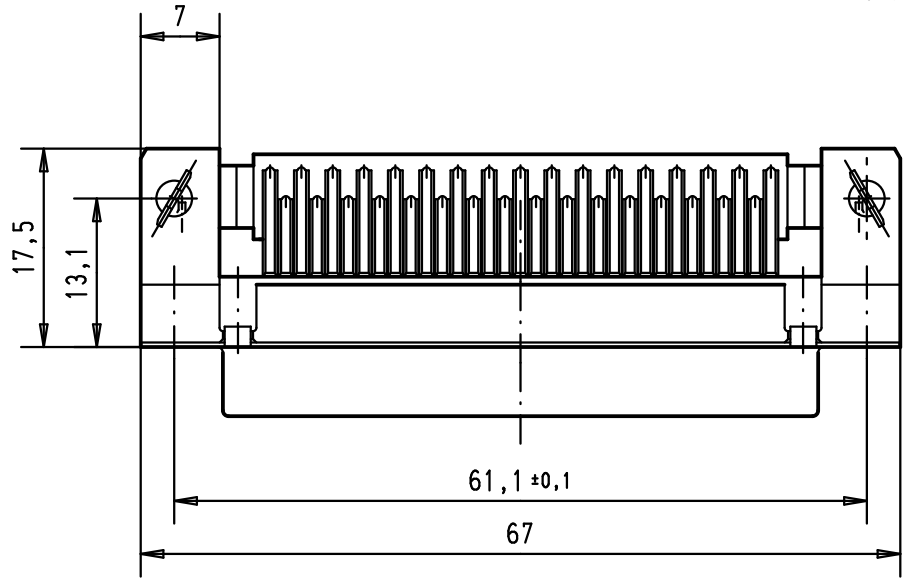

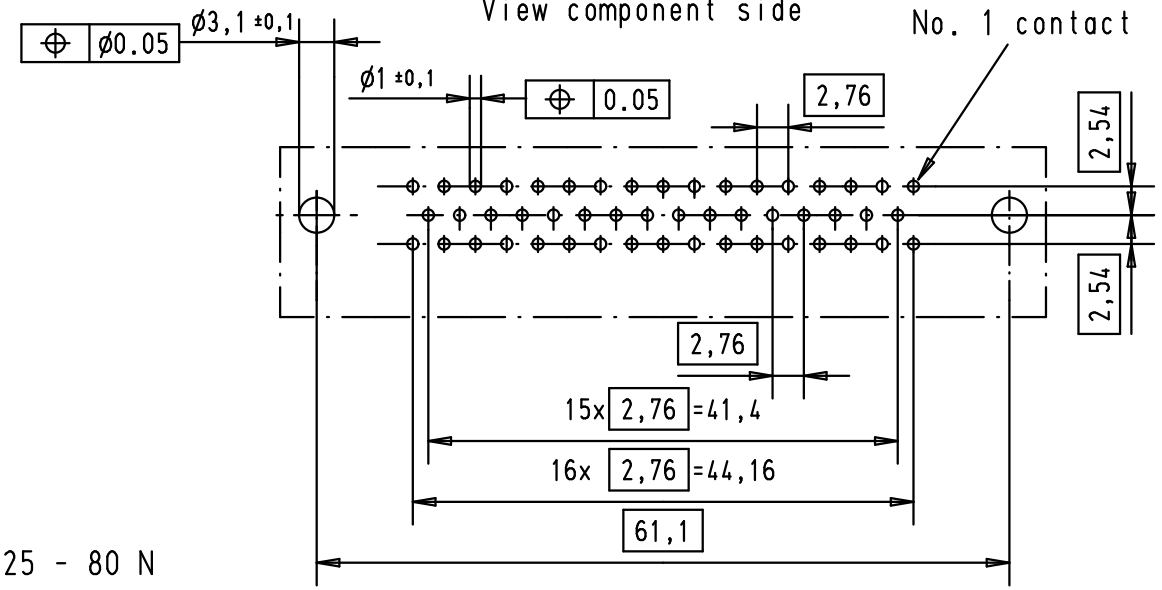

Mounting force on Printed board : 25 - 80 N

Part number	nut thread	Performance level	Mod.	Dat.	Name
09 66 552 6611	M3	2			
09 66 552 7611	M3	3			
09 66 552 3611	M3	1	36285	16/12/11	SD
09 66 552 6612	4-40 UNC	2	31084	04/09/02	YT
09 66 552 7612	4-40 UNC	3	29743	10/01/02	S.H.
09 66 552 3612	4-40 UNC	1	29722	17-OCT-01	JB

	Dat.	Name
Detail.	17-OCT-01	JB
Insp.	16/12/11	JB
Stand.		

All Dim. in mm
Orig. Size DIN A 4

D-Sub female angled 50 poles with solder pins,nuts, board lock and grounding pins

Maßstab/ *Scale* 1,5:1

HARTING EURL
F-95972 Paris

TB 09 66 552 X61X

Sub.

Blatt/ *Page* 1/1

Downloaded from Arrow.com.