MICRO SWITCH
a Honeywell Division
FED.MFG.CODE 91929

SWITCH–BASIC

CATALOG LISTING
1HS105

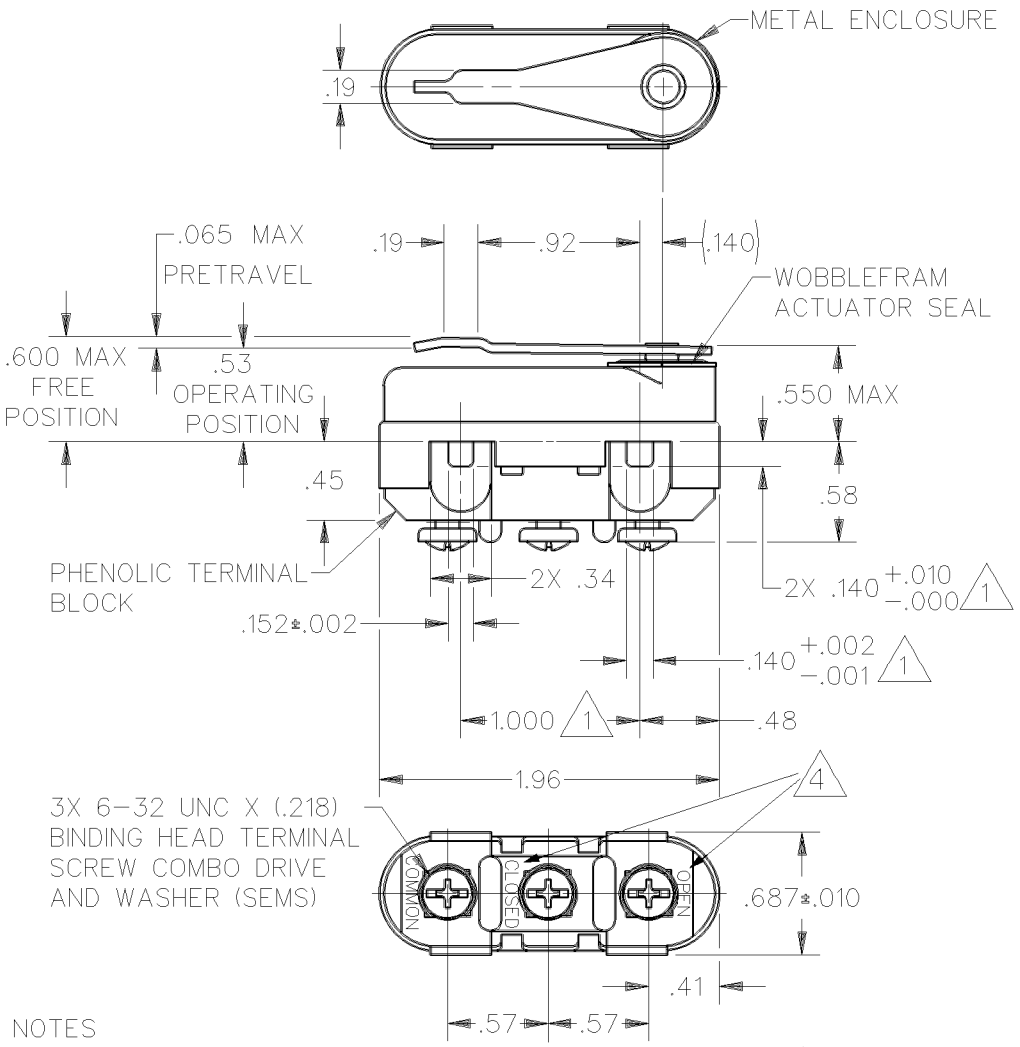

NOTES

1. MOUNTING HOLES WILL ACCEPT PINS OR SCREWS OF Ø.139 MAX ON 1.000±.002 CENTERS
2. – TRAVEL CHARACTERISTICS ARE REFERENCED FROM THE UPPER SURFACE OF MOUNTING HOLES WITH THIS CONSTRUCTION
3. – FOR USE IN AMBIENT TEMPERATURE RANGE FROM MINUS 65°F TO PLUS 250°F
4. – **CIRCUIT IDENTIFICATION FOR NORMAL STATE OF SWITCH WITH LEVER ACTUATED. OPEN AND CLOSED CIRCUIT REVERSED IF NORMAL SWITCH STATE IS WITH LEVER RELEASED**

ANSI Y14.5M–1982 APPLIES

THIS DRAWING COVERS A PROPRIETARY ITEM AND IS THE PROPERTY OF MICRO SWITCH, A DIVISION OF HONEYWELL. THIS DRAWING IS NOT TO BE COPIED OR USED WITHOUT THE APPROVAL OF MICRO SWITCH.

THIRD ANGLE PROJECTION

CHARACTERISTICS

OPERATING FORCE — — — 10–22 OZ
RELEASE FORCE — — — — 4 OZ MIN
DIFFERENTIAL TRAVEL — — — .020 MAX
OVERTRAVEL — — — — — — .010 MIN

ELECTRICAL DATA

CONTACT ARRANGEMENT
S P D T

LINE VOLTAGE	INDUCTIVE LOAD	RESISTIVE LOAD
28 VDC (SEA LEVEL/100,000 FT)	8 AMP	25 AMP
125 VAC (SEA LEVEL/70,000 FT)	1 AMP	.5 AMP

L277 DWL
1A 125 VAC, 5A 28 VDC

SCALE FULL — DO NOT SCALE PRINT

UNLESS OTHERWISE SPECIFIED TOLERANCES ARE

ONE PLACE	(.0)	±.030
TWO PLACE	(.00)	±.015
THREE PLACE	(.000)	±.005
ANGLES		±

WEIGHT 1.6 OZ MAX

1HS105
PAGE 1 OF 1
RELEASE NO. PR–342
REPLACES
DRAWING NUMBER
ISSUE 17
CHECK
REVISIONS
A CO 78141 TSM 9 AUG 94
B CO 80973 DLT 27 JUN 95
C CO-94122 TSM 12 MAR 99
D 0033032 JA 30AUG07
30AUG07
PSR
CHECK
CHECK
DRAWN T S M 9 AUG 94
RASTER

Downloaded from Arrow.com.