## Overview

The KEMET ELD aluminum electrolytic snap-in capacitors are designed with snap-lock terminals for printed circuit board mounting. The case is aluminum with an insulated sleeve and safety vent at the bottom.

## Applications

Typical applications include circuit smoothing, computer/monitor, adapters, and switch mode power supplies (SMPS).

## Benefits

- Suited for high quality, high reliability applications
- Operating temperature of −40°C to +105°C and −25°C to +105°C
- 3,000 hour operating life
- High ripple current
- RoHS Compliant and lead-free

## Part Number System

| ELD | 109 | M | 010 | | A | Q1 | AA |
|---|---|---|---|---|---|---|---|
| Series | Capacitance Code (pF) | Tolerance | Rated Voltage (VDC) | | Electrical Parameters | Size Code | Packaging |
| Snap-In Aluminum Electrolytic | First two digits represent significant figures for capacitance values. Last digit specifies the number of zeros to be added. | M = ±20% | 010 = 10<br>016 = 16<br>025 = 25<br>035 = 35<br>050 = 50<br>063 = 63<br>080 = 80<br>100 = 100 | 160 = 160<br>180 = 180<br>200 = 200<br>250 = 250<br>315 = 315<br>350 = 350<br>400 = 400<br>450 = 450<br>500 = 500<br>550 = 550 | A = Standard | See Dimension Table | See Ordering Options Table |

## Ordering Options Table

| Packaging Type | Lead Length (mm) | Lead and Packaging Code |
|---|---|---|
| Standard Bulk Packaging Options | | |
| Bulk (box) | 5.8 ± 1.0 | AA |
| Bulk (box) | 4.0 ± 1.0 | AV |



Downloaded from Arrow.com.

## Dimensions – Millimeters

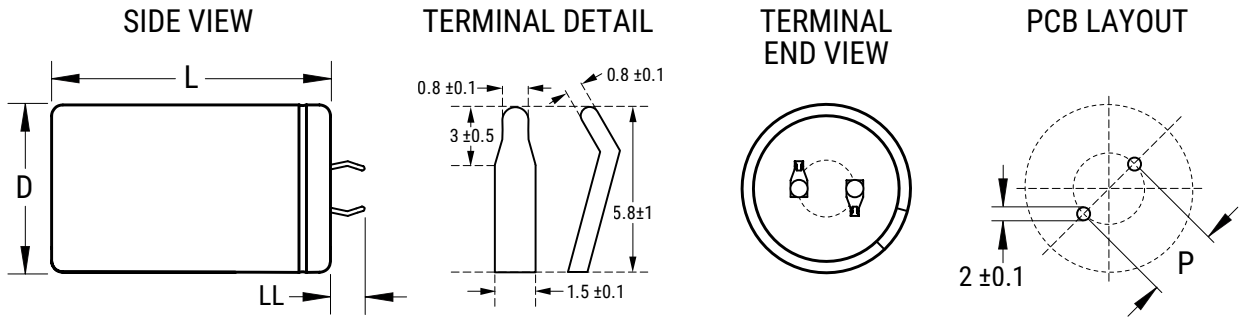


| Size Code | D | | L | | p | |
|---|---|---|---|---|---|---|
| | Nominal | Tolerance | Nominal | Tolerance | Nominal | Tolerance |
| Q1 | 22 | ±1.0 | 25 | ±2.0 | 10.0 | ±0.5 |
| Q2 | 22 | ±1.0 | 30 | ±2.0 | 10.0 | ±0.5 |
| Q3 | 22 | ±1.0 | 35 | ±2.0 | 10.0 | ±0.5 |
| Q4 | 22 | ±1.0 | 40 | ±2.0 | 10.0 | ±0.5 |
| Q5 | 22 | ±1.0 | 45 | ±2.0 | 10.0 | ±0.5 |
| Q6 | 22 | ±1.0 | 50 | ±2.0 | 10.0 | ±0.5 |
| R1 | 25 | ±1.0 | 25 | ±2.0 | 10.0 | ±0.5 |
| R2 | 25 | ±1.0 | 30 | ±2.0 | 10.0 | ±0.5 |
| R3 | 25 | ±1.0 | 35 | ±2.0 | 10.0 | ±0.5 |
| R4 | 25 | ±1.0 | 40 | ±2.0 | 10.0 | ±0.5 |
| R5 | 25 | ±1.0 | 45 | ±2.0 | 10.0 | ±0.5 |
| R6 | 25 | ±1.0 | 50 | ±2.0 | 10.0 | ±0.5 |
| S1 | 30 | ±1.0 | 25 | ±2.0 | 10.0 | ±0.5 |
| S2 | 30 | ±1.0 | 30 | ±2.0 | 10.0 | ±0.5 |
| S3 | 30 | ±1.0 | 35 | ±2.0 | 10.0 | ±0.5 |
| S4 | 30 | ±1.0 | 40 | ±2.0 | 10.0 | ±0.5 |
| S5 | 30 | ±1.0 | 45 | ±2.0 | 10.0 | ±0.5 |
| S6 | 30 | ±1.0 | 50 | ±2.0 | 10.0 | ±0.5 |
| T1 | 35 | ±1.0 | 25 | ±2.0 | 10.0 | ±0.5 |
| T2 | 35 | ±1.0 | 30 | ±2.0 | 10.0 | ±0.5 |
| T3 | 35 | ±1.0 | 35 | ±2.0 | 10.0 | ±0.5 |
| T4 | 35 | ±1.0 | 40 | ±2.0 | 10.0 | ±0.5 |
| T5 | 35 | ±1.0 | 45 | ±2.0 | 10.0 | ±0.5 |
| T6 | 35 | ±1.0 | 50 | ±2.0 | 10.0 | ±0.5 |
| T8 | 35 | ±1.0 | 60 | ±2.0 | 10.0 | ±0.5 |



Downloaded from Arrow.com.

## Environmental Compliance

As an environmentally conscious company, KEMET is working continuously with improvements concerning the environmental effects of both our capacitors and their production. In Europe (RoHS Directive) and in some other geographical areas like China, legislation has been put in place to prevent the use of some hazardous materials, such as lead (Pb), in electronic equipment. All products in this catalog are produced to help our customers' obligations to guarantee their products and fulfill these legislative requirements. The only material of concern in our products has been lead (Pb), which has been removed from all designs to fulfill the requirement of containing less than 0.1% of lead in any homogeneous material. KEMET will closely follow any changes in legislation world wide and make any necessary changes in its products, whenever needed.

Some customer segments such as medical, military and automotive electronics may still require the use of lead in electrode coatings. To clarify the situation and distinguish products from each other, a special symbol is used on the packaging labels for RoHS compatible capacitors.

Due to customer requirements, there may appear additional markings such as lead free (LF) or lead-free wires (LFW) on the label.

## Performance Characteristics

| Item | Performance Characteristics | |
|---|---|---|
| Capacitance Range | 560 – 68,000 µF | 47 – 2,200 µF |
| Capacitance Tolerance | ±20% at 120 Hz/20°C | |
| Rated Voltage | 10 - 100 VDC | 160 - 550 VDC |
| Life Test | 3,000 hours (see conditions in Test Methods & Performance) | |
| Operating Temperature | −40°C to +105°C | −25°C to +105°C |
| Leakage Current | I = 0.02 CV (mA) or 3 mA, whichever is smaller | |
| | C = rated capacitance (µF), V = rated voltage (VDC). Voltage applied for 5 minutes at 20°C. | |

## Compensation Factor of Ripple Current (RC) vs. Frequency

| Rated Voltage (VDC) | 50 Hz | 60 Hz | 120 Hz | 400 Hz | 1 kHz | 2.4 kHz | 5 kHz | 10 kHz |
|---|---|---|---|---|---|---|---|---|
| 10 – 450 | 0.80 | 0.85 | 1.00 | 1.14 | 1.23 | 1.30 | 1.36 | 1.40 |
| 500 - 550 | 0.70 | 0.72 | 1.00 | 1.16 | 1.30 | 1.32 | 1.36 | 1.41 |



Downloaded from Arrow.com.

## Test Method & Performance

| Conditions | Load Life Test | Shelf Life Test |
|---|---|---|
| Temperature | 105°C | 105°C |
| Test Duration | 3,000 hours | 1,000 hours |
| Ripple Current | Maximum ripple current specified at 120 kHz 105°C specified in table | No ripple current applied |
| Voltage | The sum of DC voltage and the peak AC voltage must not exceed the rated voltage of the capacitor | No voltage applied |
| **Performance** | **The following specifications will be satisfied when the capacitor is restored to 20°C:** | |
| Capacitance Change | Within ±20% of the initial value | |
| Dissipation Factor | Does not exceed 200% of the specified value | Does not exceed 200% of the specified value |
| Leakage Current | Does not exceed specified value | |

## Shelf Life

The capacitance, ESR and impedance of a capacitor will not change significantly after extended storage periods, however, the leakage current will very slowly increase.

KEMET's E aluminum electrolytic capacitors should not be stored in high temperatures or where there is a high level of humidity. The suitable storage condition for KEMET's E aluminum electrolytic capacitors is +5 to +35°C and less than 75% in relative humidity. KEMET's E aluminum electrolytic capacitors should not be stored in damp conditions such as water, saltwater spray or oil spray. KEMET's E aluminum electrolytic capacitors should not be stored in an environment full of hazardous gas (hydrogen sulphide, sulphurous acid gas, nitrous acid, chlorine gas, ammonium, etc.) KEMET's E aluminum electrolytic capacitors should not be stored under exposure to ozone, ultraviolet rays or radiation.

**If a capacitor has been stored for more than 18 months under these conditions and it shows increased leakage current, then a treatment by voltage application is recommended.**

## Re-Age (Reforming) Procedure

Apply the rated voltage to the capacitor at room temperature for a period of one hour, or until the leakage current has fallen to a steady value below the specified limit. During re-aging a maximum charging current of twice the specified leakage current or 5 mA, whichever is greater, is suggested.



Downloaded from Arrow.com.

## Table 1 – Ratings & Part Number Reference

| VDC | VDC Surge Voltage | Rated Capacitance 120 Hz 20°C (µF) | Case Size D x L (mm) | DF 120 Hz 20°C (tan δ %) | RC 120 Hz 105°C (A) | ESR 120 Hz 20°C (Ω) | LC 20°C 5 Minutes (mA) | Part Number |
|---|---|---|---|---|---|---|---|---|
| 10 | 13 | 10000 | 22 x 25 | 55 | 1.80 | 0.073 | 2.0 | ELD109M010AQ1(1) |
| 10 | 13 | 12000 | 22 x 30 | 55 | 2.05 | 0.061 | 2.4 | ELD129M010AQ2(1) |
| 10 | 13 | 12000 | 25 x 25 | 55 | 2.05 | 0.061 | 2.4 | ELD129M010AR1(1) |
| 10 | 13 | 15000 | 22 x 35 | 55 | 2.45 | 0.049 | 3.0 | ELD159M010AQ3(1) |
| 10 | 13 | 15000 | 25 x 30 | 55 | 2.45 | 0.049 | 3.0 | ELD159M010AR2(1) |
| 10 | 13 | 15000 | 30 x 25 | 55 | 2.55 | 0.049 | 3.0 | ELD159M010AS1(1) |
| 10 | 13 | 18000 | 22 x 40 | 55 | 2.94 | 0.041 | 3.0 | ELD189M010AQ4(1) |
| 10 | 13 | 18000 | 25 x 30 | 55 | 2.80 | 0.041 | 3.0 | ELD189M010AR2(1) |
| 10 | 13 | 18000 | 30 x 30 | 55 | 3.11 | 0.041 | 3.0 | ELD189M010AS2(1) |
| 10 | 13 | 22000 | 22 x 45 | 55 | 3.24 | 0.033 | 3.0 | ELD229M010AQ5(1) |
| 10 | 13 | 22000 | 25 x 35 | 55 | 3.15 | 0.033 | 3.0 | ELD229M010AR3(1) |
| 10 | 13 | 22000 | 30 x 30 | 55 | 3.28 | 0.033 | 3.0 | ELD229M010AS2(1) |
| 10 | 13 | 22000 | 35 x 25 | 55 | 3.37 | 0.033 | 3.0 | ELD229M010AT1(1) |
| 10 | 13 | 27000 | 25 x 40 | 55 | 3.50 | 0.027 | 3.0 | ELD279M010AR4(1) |
| 10 | 13 | 27000 | 30 x 35 | 55 | 3.67 | 0.027 | 3.0 | ELD279M010AS3(1) |
| 10 | 13 | 27000 | 35 x 30 | 55 | 3.78 | 0.027 | 3.0 | ELD279M010AT2(1) |
| 10 | 13 | 33000 | 25 x 45 | 55 | 4.00 | 0.022 | 3.0 | ELD339M010AR5(1) |
| 10 | 13 | 33000 | 30 x 40 | 55 | 4.20 | 0.022 | 3.0 | ELD339M010AS4(1) |
| 10 | 13 | 33000 | 35 x 30 | 55 | 4.08 | 0.022 | 3.0 | ELD339M010AT2(1) |
| 10 | 13 | 39000 | 25 x 50 | 55 | 4.45 | 0.019 | 3.0 | ELD399M010AR6(1) |
| 10 | 13 | 39000 | 30 x 45 | 55 | 4.67 | 0.019 | 3.0 | ELD399M010AS5(1) |
| 10 | 13 | 39000 | 35 x 35 | 55 | 4.63 | 0.019 | 3.0 | ELD399M010AT3(1) |
| 10 | 13 | 47000 | 35 x 40 | 55 | 4.90 | 0.016 | 3.0 | ELD479M010AT4(1) |
| 10 | 13 | 56000 | 35 x 45 | 55 | 5.50 | 0.013 | 3.0 | ELD569M010AT5(1) |
| 10 | 13 | 68000 | 35 x 50 | 55 | 6.05 | 0.011 | 3.0 | ELD689M010AT6(1) |
| 16 | 20 | 6800 | 22 x 25 | 55 | 1.80 | 0.107 | 2.2 | ELD688M016AQ1(1) |
| 16 | 20 | 8200 | 22 x 30 | 55 | 2.05 | 0.089 | 2.6 | ELD828M016AQ2(1) |
| 16 | 20 | 8200 | 25 x 25 | 55 | 2.05 | 0.089 | 2.6 | ELD828M016AR1(1) |
| 16 | 20 | 10000 | 22 x 35 | 55 | 2.45 | 0.073 | 3.0 | ELD109M016AQ3(1) |
| 16 | 20 | 10000 | 25 x 30 | 55 | 2.45 | 0.073 | 3.0 | ELD109M016AR2(1) |
| 16 | 20 | 12000 | 22 x 40 | 55 | 2.73 | 0.061 | 3.0 | ELD129M016AQ4(1) |
| 16 | 20 | 12000 | 25 x 30 | 55 | 2.60 | 0.061 | 3.0 | ELD129M016AR2(1) |
| 16 | 20 | 12000 | 30 x 25 | 55 | 2.68 | 0.061 | 3.0 | ELD129M016AS1(1) |
| 16 | 20 | 15000 | 22 x 45 | 55 | 2.99 | 0.049 | 3.0 | ELD159M016AQ5(1) |
| 16 | 20 | 15000 | 25 x 35 | 55 | 2.90 | 0.049 | 3.0 | ELD159M016AR3(1) |
| 16 | 20 | 15000 | 30 x 30 | 55 | 3.02 | 0.049 | 3.0 | ELD159M016AS2(1) |
| 16 | 20 | 18000 | 22 x 50 | 55 | 3.43 | 0.041 | 3.0 | ELD189M016AQ6(1) |
| 16 | 20 | 18000 | 25 x 40 | 55 | 3.33 | 0.041 | 3.0 | ELD189M016AR4(1) |
| 16 | 20 | 18000 | 30 x 30 | 55 | 3.30 | 0.041 | 3.0 | ELD189M016AS2(1) |
| 16 | 20 | 18000 | 35 x 25 | 55 | 3.37 | 0.041 | 3.0 | ELD189M016AT1(1) |
| 16 | 20 | 22000 | 25 x 45 | 55 | 3.70 | 0.033 | 3.0 | ELD229M016AR5(1) |
| 16 | 20 | 22000 | 30 x 35 | 55 | 3.70 | 0.033 | 3.0 | ELD229M016AS3(1) |
| 16 | 20 | 22000 | 35 x 30 | 55 | 3.81 | 0.033 | 3.0 | ELD229M016AT2(1) |
| 16 | 20 | 27000 | 30 x 40 | 55 | 4.15 | 0.027 | 3.0 | ELD279M016AS4(1) |
| 16 | 20 | 27000 | 35 x 35 | 55 | 4.27 | 0.027 | 3.0 | ELD279M016AT3(1) |
| 16 | 20 | 33000 | 30 x 50 | 55 | 4.65 | 0.022 | 3.0 | ELD339M016AS6(1) |
| 16 | 20 | 33000 | 35 x 40 | 55 | 4.65 | 0.022 | 3.0 | ELD339M016AT4(1) |
| 16 | 20 | 39000 | 35 x 45 | 55 | 5.25 | 0.019 | 3.0 | ELD399M016AT5(1) |
| 16 | 20 | 47000 | 35 x 50 | 55 | 5.80 | 0.016 | 3.0 | ELD479M016AT6(1) |
| 25 | 32 | 3900 | 22 x 25 | 45 | 1.50 | 0.153 | 2.0 | ELD398M025AQ1(1) |
| 25 | 32 | 4700 | 22 x 30 | 45 | 1.80 | 0.127 | 2.4 | ELD478M025AQ2(1) |
| 25 | 32 | 5600 | 22 x 30 | 45 | 1.95 | 0.107 | 2.8 | ELD568M025AQ2(1) |
| 25 | 32 | 5600 | 25 x 25 | 45 | 1.95 | 0.107 | 2.8 | ELD568M025AR1(1) |
| 25 | 32 | 6800 | 22 x 35 | 45 | 2.20 | 0.088 | 3.0 | ELD688M025AQ3(1) |
| 25 | 32 | 6800 | 25 x 30 | 45 | 2.20 | 0.088 | 3.0 | ELD688M025AR2(1) |
| 25 | 32 | 8200 | 22 x 40 | 45 | 2.47 | 0.073 | 3.0 | ELD828M025AQ4(1) |
| 25 | 32 | 8200 | 25 x 35 | 45 | 2.50 | 0.073 | 3.0 | ELD828M025AR3(1) |
| **VDC** | **VDC Surge** | **Rated Capacitance** | **Case Size** | **DF** | **RC** | **ESR** | **LC** | **Part Number** |

*(1) Insert packaging code. See Ordering Options Table for available options.*



Downloaded from Arrow.com.

## Table 1 – Ratings & Part Number Reference cont.

| VDC | VDC Surge Voltage | Rated Capacitance 120 Hz 20°C (µF) | Case Size D x L (mm) | DF 120 Hz 20°C (tan δ %) | RC 120 Hz 105°C (A) | ESR 120 Hz 20°C (Ω) | LC 20°C 5 Minutes (mA) | Part Number |
|---|---|---|---|---|---|---|---|---|
| 25 | 32 | 8200 | 30 x 25 | 45 | 2.45 | 0.073 | 3.0 | ELD828M025AS1(1) |
| 25 | 32 | 10000 | 22 x 45 | 45 | 2.75 | 0.060 | 3.0 | ELD109M025AQ5(1) |
| 25 | 32 | 10000 | 25 x 40 | 45 | 2.80 | 0.060 | 3.0 | ELD109M025AR4(1) |
| 25 | 32 | 10000 | 30 x 30 | 45 | 2.75 | 0.060 | 3.0 | ELD109M025AS2(1) |
| 25 | 32 | 12000 | 22 x 50 | 45 | 3.13 | 0.050 | 3.0 | ELD129M025AQ6(1) |
| 25 | 32 | 12000 | 25 x 45 | 45 | 3.22 | 0.050 | 3.0 | ELD129M025AR5(1) |
| 25 | 32 | 12000 | 30 x 35 | 45 | 3.19 | 0.050 | 3.0 | ELD129M025AS3(1) |
| 25 | 32 | 12000 | 35 x 25 | 45 | 3.10 | 0.050 | 3.0 | ELD129M025AT1(1) |
| 25 | 32 | 15000 | 25 x 50 | 45 | 3.43 | 0.040 | 3.0 | ELD159M025AR6(1) |
| 25 | 32 | 15000 | 30 x 40 | 45 | 3.47 | 0.040 | 3.0 | ELD159M025AS4(1) |
| 25 | 32 | 15000 | 35 x 30 | 45 | 3.40 | 0.040 | 3.0 | ELD159M025AT2(1) |
| 25 | 32 | 18000 | 30 x 45 | 45 | 3.94 | 0.033 | 3.0 | ELD189M025AS5(1) |
| 25 | 32 | 18000 | 35 x 35 | 45 | 3.90 | 0.033 | 3.0 | ELD189M025AT3(1) |
| 25 | 32 | 22000 | 30 x 50 | 45 | 4.30 | 0.027 | 3.0 | ELD229M025AS6(1) |
| 25 | 32 | 22000 | 35 x 40 | 45 | 4.30 | 0.027 | 3.0 | ELD229M025AT4(1) |
| 25 | 32 | 27000 | 35 x 45 | 45 | 4.85 | 0.022 | 3.0 | ELD279M025AT5(1) |
| 35 | 44 | 2700 | 22 x 25 | 40 | 1.45 | 0.196 | 1.9 | ELD278M035AQ1(1) |
| 35 | 44 | 3300 | 22 x 30 | 40 | 1.60 | 0.161 | 2.3 | ELD338M035AQ2(1) |
| 35 | 44 | 3900 | 22 x 30 | 40 | 1.80 | 0.136 | 2.7 | ELD398M035AQ2(1) |
| 35 | 44 | 4700 | 22 x 35 | 40 | 2.23 | 0.113 | 3.0 | ELD478M035AQ3(1) |
| 35 | 44 | 4700 | 25 x 25 | 40 | 2.10 | 0.113 | 3.0 | ELD478M035AR1(1) |
| 35 | 44 | 5600 | 22 x 40 | 40 | 2.41 | 0.095 | 3.0 | ELD568M035AQ4(1) |
| 35 | 44 | 5600 | 25 x 30 | 40 | 2.30 | 0.095 | 3.0 | ELD568M035AR2(1) |
| 35 | 44 | 5600 | 30 x 25 | 40 | 2.37 | 0.095 | 3.0 | ELD568M035AS1(1) |
| 35 | 44 | 6800 | 22 x 45 | 40 | 2.68 | 0.078 | 3.0 | ELD688M035AQ5(1) |
| 35 | 44 | 6800 | 25 x 35 | 40 | 2.60 | 0.078 | 3.0 | ELD688M035AR3(1) |
| 35 | 44 | 6800 | 30 x 30 | 40 | 2.70 | 0.078 | 3.0 | ELD688M035AS2(1) |
| 35 | 44 | 8200 | 22 x 50 | 40 | 3.02 | 0.065 | 3.0 | ELD828M035AQ6(1) |
| 35 | 44 | 8200 | 25 x 40 | 40 | 2.93 | 0.065 | 3.0 | ELD828M035AR4(1) |
| 35 | 44 | 8200 | 30 x 30 | 40 | 2.90 | 0.065 | 3.0 | ELD828M035AS2(1) |
| 35 | 44 | 8200 | 35 x 25 | 40 | 2.96 | 0.065 | 3.0 | ELD828M035AT1(1) |
| 35 | 44 | 10000 | 25 x 45 | 40 | 3.20 | 0.053 | 3.0 | ELD109M035AR5(1) |
| 35 | 44 | 10000 | 30 x 35 | 40 | 3.20 | 0.053 | 3.0 | ELD109M035AS3(1) |
| 35 | 44 | 10000 | 35 x 30 | 40 | 3.30 | 0.053 | 3.0 | ELD109M035AT2(1) |
| 35 | 44 | 12000 | 25 x 50 | 40 | 3.64 | 0.044 | 3.0 | ELD129M035AR6(1) |
| 35 | 44 | 12000 | 30 x 40 | 40 | 3.67 | 0.044 | 3.0 | ELD129M035AS4(1) |
| 35 | 44 | 12000 | 35 x 30 | 40 | 3.60 | 0.044 | 3.0 | ELD129M035AT2(1) |
| 35 | 44 | 15000 | 30 x 45 | 40 | 4.04 | 0.035 | 3.0 | ELD159M035AS5(1) |
| 35 | 44 | 15000 | 35 x 35 | 40 | 4.00 | 0.035 | 3.0 | ELD159M035AT3(1) |
| 35 | 44 | 18000 | 35 x 40 | 40 | 4.60 | 0.029 | 3.0 | ELD189M035AT4(1) |
| 35 | 44 | 22000 | 35 x 50 | 40 | 2.10 | 0.024 | 3.0 | ELD229M035AT6(1) |
| 50 | 63 | 1500 | 22 x 25 | 35 | 1.25 | 0.309 | 1.5 | ELD158M050AQ1(1) |
| 50 | 63 | 1800 | 22 x 30 | 35 | 1.45 | 0.258 | 1.8 | ELD188M050AQ2(1) |
| 50 | 63 | 2200 | 22 x 30 | 35 | 1.60 | 0.211 | 2.2 | ELD228M050AQ2(1) |
| 50 | 63 | 2200 | 25 x 25 | 35 | 1.60 | 0.211 | 2.2 | ELD228M050AR1(1) |
| 50 | 63 | 2700 | 22 x 35 | 35 | 1.80 | 0.172 | 2.7 | ELD278M050AQ3(1) |
| 50 | 63 | 2700 | 25 x 30 | 35 | 1.80 | 0.172 | 2.7 | ELD278M050AR2(1) |
| 50 | 63 | 3300 | 22 x 40 | 35 | 2.05 | 0.141 | 3.0 | ELD338M050AQ4(1) |
| 50 | 63 | 3300 | 25 x 30 | 35 | 1.95 | 0.141 | 3.0 | ELD338M050AR2(1) |
| 50 | 63 | 3300 | 30 x 25 | 35 | 2.01 | 0.141 | 3.0 | ELD338M050AS1(1) |
| 50 | 63 | 3900 | 22 x 45 | 35 | 2.27 | 0.119 | 3.0 | ELD398M050AQ5(1) |
| 50 | 63 | 3900 | 25 x 35 | 35 | 2.20 | 0.119 | 3.0 | ELD398M050AR3(1) |
| 50 | 63 | 3900 | 30 x 30 | 35 | 2.29 | 0.119 | 3.0 | ELD398M050AS2(1) |
| 50 | 63 | 4700 | 22 x 50 | 35 | 2.50 | 0.099 | 3.0 | ELD478M050AQ6(1) |
| 50 | 63 | 4700 | 25 x 40 | 35 | 2.42 | 0.099 | 3.0 | ELD478M050AR4(1) |
| 50 | 63 | 4700 | 30 x 30 | 35 | 2.40 | 0.099 | 3.0 | ELD478M050AS2(1) |
| 50 | 63 | 4700 | 35 x 25 | 35 | 2.45 | 0.099 | 3.0 | ELD478M050AT1(1) |
| **VDC** | **VDC Surge** | **Rated Capacitance** | **Case Size** | **DF** | **RC** | **ESR** | **LC** | **Part Number** |

*(1) Insert packaging code. See Ordering Options Table for available options.*



Downloaded from Arrow.com.

## Table 1 – Ratings & Part Number Reference cont.

| VDC | VDC Surge Voltage | Rated Capacitance 120 Hz 20°C (µF) | Case Size D x L (mm) | DF 120 Hz 20°C (tan δ %) | RC 120 Hz 105°C (A) | ESR 120 Hz 20°C (Ω) | LC 20°C 5 Minutes (mA) | Part Number |
|---|---|---|---|---|---|---|---|---|
| 50 | 63 | 5600 | 25 x 45 | 35 | 2.70 | 0.083 | 3.0 | ELD568M050AR5(1) |
| 50 | 63 | 5600 | 30 x 35 | 35 | 2.70 | 0.083 | 3.0 | ELD568M050AS3(1) |
| 50 | 63 | 5600 | 35 x 30 | 35 | 2.78 | 0.083 | 3.0 | ELD568M050AT2(1) |
| 50 | 63 | 6800 | 30 x 40 | 35 | 3.06 | 0.068 | 3.0 | ELD688M050AS4(1) |
| 50 | 63 | 6800 | 35 x 30 | 35 | 3.00 | 0.068 | 3.0 | ELD688M050AT2(1) |
| 50 | 63 | 8200 | 30 x 45 | 35 | 3.38 | 0.057 | 3.0 | ELD828M050AS5(1) |
| 50 | 63 | 8200 | 35 x 35 | 35 | 3.35 | 0.057 | 3.0 | ELD828M050AT3(1) |
| 50 | 63 | 10000 | 35 x 40 | 35 | 3.70 | 0.046 | 3.0 | ELD109M050AT4(1) |
| 50 | 63 | 12000 | 35 x 50 | 35 | 4.20 | 0.039 | 3.0 | ELD129M050AT6(1) |
| 63 | 79 | 1200 | 22 x 25 | 30 | 1.25 | 0.276 | 1.5 | ELD128M063AQ1(1) |
| 63 | 79 | 1500 | 22 x 30 | 30 | 1.45 | 0.265 | 1.9 | ELD158M063AQ2(1) |
| 63 | 79 | 1500 | 25 x 25 | 30 | 1.45 | 0.265 | 1.9 | ELD158M063AR1(1) |
| 63 | 79 | 1800 | 22 x 35 | 30 | 1.60 | 0.221 | 2.3 | ELD188M063AQ3(1) |
| 63 | 79 | 1800 | 25 x 30 | 30 | 1.60 | 0.221 | 2.3 | ELD188M063AR2(1) |
| 63 | 79 | 2200 | 22 x 40 | 30 | 1.89 | 0.181 | 2.8 | ELD228M063AQ4(1) |
| 63 | 79 | 2200 | 25 x 30 | 30 | 1.80 | 0.181 | 2.8 | ELD228M063AR2(1) |
| 63 | 79 | 2200 | 30 x 25 | 30 | 1.85 | 0.181 | 2.8 | ELD228M063AS1(1) |
| 63 | 79 | 2700 | 22 x 45 | 30 | 2.06 | 0.147 | 3.0 | ELD278M063AQ5(1) |
| 63 | 79 | 2700 | 25 x 35 | 30 | 2.00 | 0.147 | 3.0 | ELD278M063AR3(1) |
| 63 | 79 | 2700 | 30 x 30 | 30 | 2.08 | 0.147 | 3.0 | ELD278M063AS2(1) |
| 63 | 79 | 3300 | 25 x 40 | 30 | 2.32 | 0.121 | 3.0 | ELD338M063AR4(1) |
| 63 | 79 | 3300 | 30 x 30 | 30 | 2.30 | 0.121 | 3.0 | ELD338M063AS2(1) |
| 63 | 79 | 3300 | 35 x 25 | 30 | 2.35 | 0.121 | 3.0 | ELD338M063AT1(1) |
| 63 | 79 | 3900 | 25 x 45 | 30 | 2.55 | 0.102 | 3.0 | ELD398M063AR5(1) |
| 63 | 79 | 3900 | 30 x 35 | 30 | 2.55 | 0.102 | 3.0 | ELD398M063AS3(1) |
| 63 | 79 | 3900 | 35 x 30 | 30 | 2.63 | 0.102 | 3.0 | ELD398M063AT2(1) |
| 63 | 79 | 4700 | 25 x 50 | 30 | 2.83 | 0.085 | 3.0 | ELD478M063AR6(1) |
| 63 | 79 | 4700 | 30 x 40 | 30 | 2.86 | 0.085 | 3.0 | ELD478M063AS4(1) |
| 63 | 79 | 4700 | 35 x 30 | 30 | 2.80 | 0.085 | 3.0 | ELD478M063AT2(1) |
| 63 | 79 | 5600 | 30 x 45 | 30 | 3.18 | 0.071 | 3.0 | ELD568M063AS5(1) |
| 63 | 79 | 5600 | 35 x 35 | 30 | 3.15 | 0.071 | 3.0 | ELD568M063AT3(1) |
| 63 | 79 | 6800 | 30 x 50 | 30 | 3.50 | 0.059 | 3.0 | ELD688M063AS6(1) |
| 63 | 79 | 6800 | 35 x 40 | 30 | 3.50 | 0.059 | 3.0 | ELD688M063AT4(1) |
| 63 | 79 | 8200 | 35 x 45 | 30 | 3.90 | 0.049 | 3.0 | ELD828M063AT5(1) |
| 80 | 100 | 820 | 22 x 25 | 25 | 1.20 | 0.404 | 1.3 | ELD827M080AQ1(1) |
| 80 | 100 | 1000 | 22 x 30 | 25 | 1.35 | 0.332 | 1.6 | ELD108M080AQ2(1) |
| 80 | 100 | 1200 | 22 x 35 | 25 | 1.59 | 0.276 | 1.9 | ELD128M080AQ3(1) |
| 80 | 100 | 1200 | 25 x 25 | 25 | 1.50 | 0.276 | 1.9 | ELD128M080AR1(1) |
| 80 | 100 | 1500 | 22 x 40 | 25 | 1.78 | 0.221 | 2.4 | ELD158M080AQ4(1) |
| 80 | 100 | 1500 | 25 x 30 | 25 | 1.70 | 0.221 | 2.4 | ELD158M080AR2(1) |
| 80 | 100 | 1500 | 30 x 25 | 25 | 1.75 | 0.221 | 2.4 | ELD158M080AS1(1) |
| 80 | 100 | 1800 | 22 x 45 | 25 | 2.01 | 0.184 | 2.9 | ELD188M080AQ5(1) |
| 80 | 100 | 1800 | 25 x 35 | 25 | 1.95 | 0.184 | 2.9 | ELD188M080AR3(1) |
| 80 | 100 | 1800 | 30 x 30 | 25 | 2.03 | 0.184 | 2.9 | ELD188M080AS2(1) |
| 80 | 100 | 2200 | 25 x 40 | 25 | 2.17 | 0.151 | 3.0 | ELD228M080AR4(1) |
| 80 | 100 | 2200 | 30 x 30 | 25 | 2.15 | 0.151 | 3.0 | ELD228M080AS2(1) |
| 80 | 100 | 2200 | 35 x 25 | 25 | 2.19 | 0.151 | 3.0 | ELD228M080AT1(1) |
| 80 | 100 | 2700 | 25 x 45 | 25 | 2.45 | 0.123 | 3.0 | ELD278M080AR5(1) |
| 80 | 100 | 2700 | 30 x 35 | 25 | 2.45 | 0.123 | 3.0 | ELD278M080AS3(1) |
| 80 | 100 | 2700 | 35 x 30 | 25 | 2.52 | 0.123 | 3.0 | ELD278M080AT2(1) |
| 80 | 100 | 3300 | 30 x 40 | 25 | 2.75 | 0.100 | 3.0 | ELD338M080AS4(1) |
| 80 | 100 | 3300 | 35 x 35 | 25 | 2.83 | 0.100 | 3.0 | ELD338M080AT3(1) |
| 80 | 100 | 3900 | 30 x 45 | 25 | 2.13 | 0.085 | 3.0 | ELD398M080AS5(1) |
| 80 | 100 | 3900 | 35 x 35 | 25 | 3.10 | 0.085 | 3.0 | ELD398M080AT3(1) |
| 80 | 100 | 4700 | 35 x 40 | 25 | 2.40 | 0.071 | 3.0 | ELD478M080AT4(1) |
| 80 | 100 | 5600 | 35 x 50 | 25 | 2.80 | 0.059 | 3.0 | ELD568M080AT6(1) |
| 100 | 125 | 560 | 22 x 25 | 25 | 1.20 | 0.592 | 1.1 | ELD567M100AQ1(1) |
| **VDC** | **VDC Surge** | **Rated Capacitance** | **Case Size** | **DF** | **RC** | **ESR** | **LC** | **Part Number** |

*(1) Insert packaging code. See Ordering Options Table for available options.*



Downloaded from Arrow.com.

## Table 1 – Ratings & Part Number Reference cont.

| VDC | VDC Surge Voltage | Rated Capacitance 120 Hz 20°C (µF) | Case Size D x L (mm) | DF 120 Hz 20°C (tan δ %) | RC 120 Hz 105°C (A) | ESR 120 Hz 20°C (Ω) | LC 20°C 5 Minutes (mA) | Part Number |
|---|---|---|---|---|---|---|---|---|
| 100 | 125 | 680 | 22 x 30 | 25 | 1.35 | 0.488 | 1.4 | ELD687M100AQ2(1) |
| 100 | 125 | 820 | 22 x 30 | 25 | 1.50 | 0.404 | 1.6 | ELD827M100AQ2(1) |
| 100 | 125 | 820 | 25 x 25 | 25 | 1.50 | 0.404 | 1.6 | ELD827M100AR1(1) |
| 100 | 125 | 1000 | 22 x 35 | 25 | 1.70 | 0.332 | 2.0 | ELD108M100AQ3(1) |
| 100 | 125 | 1000 | 25 x 30 | 25 | 1.70 | 0.332 | 2.0 | ELD108M100AR2(1) |
| 100 | 125 | 1200 | 22 x 40 | 25 | 1.97 | 0.276 | 2.4 | ELD128M100AQ4(1) |
| 100 | 125 | 1200 | 25 x 35 | 25 | 1.99 | 0.276 | 2.4 | ELD128M100AR3(1) |
| 100 | 125 | 1200 | 30 x 25 | 25 | 1.95 | 0.276 | 2.4 | ELD128M100AS1(1) |
| 100 | 125 | 1500 | 22 x 45 | 25 | 2.15 | 0.221 | 3.0 | ELD158M100AQ5(1) |
| 100 | 125 | 1500 | 25 x 40 | 25 | 2.19 | 0.221 | 3.0 | ELD158M100AR4(1) |
| 100 | 125 | 1500 | 30 x 30 | 25 | 2.15 | 0.221 | 3.0 | ELD158M100AS2(1) |
| 100 | 125 | 1500 | 35 x 25 | 25 | 2.21 | 0.221 | 3.0 | ELD158M100AT1(1) |
| 100 | 125 | 1800 | 25 x 45 | 25 | 2.45 | 0.184 | 3.0 | ELD188M100AR5(1) |
| 100 | 125 | 1800 | 30 x 35 | 25 | 2.45 | 0.184 | 3.0 | ELD188M100AS3(1) |
| 100 | 125 | 1800 | 35 x 30 | 25 | 2.52 | 0.184 | 3.0 | ELD188M100AT2(1) |
| 100 | 125 | 2200 | 25 x 50 | 25 | 2.75 | 0.151 | 3.0 | ELD228M100AR6(1) |
| 100 | 125 | 2200 | 30 x 40 | 25 | 2.75 | 0.151 | 3.0 | ELD228M100AS4(1) |
| 100 | 125 | 2200 | 35 x 35 | 25 | 2.86 | 0.151 | 3.0 | ELD228M100AT3(1) |
| 100 | 125 | 2700 | 30 x 45 | 25 | 3.08 | 0.123 | 3.0 | ELD278M100AS5(1) |
| 100 | 125 | 2700 | 35 x 35 | 25 | 3.05 | 0.123 | 3.0 | ELD278M100AT3(1) |
| 100 | 125 | 3300 | 30 x 50 | 25 | 3.45 | 0.100 | 3.0 | ELD338M100AS6(1) |
| 100 | 125 | 3300 | 35 x 40 | 25 | 3.45 | 0.100 | 3.0 | ELD338M100AT4(1) |
| 100 | 125 | 3900 | 35 x 45 | 25 | 3.90 | 0.085 | 3.0 | ELD398M100AT5(1) |
| 100 | 125 | 4700 | 35 x 50 | 25 | 4.30 | 0.071 | 3.0 | ELD478M100AT6(1) |
| 160 | 200 | 270 | 22 x 25 | 15 | 0.85 | 0.737 | 0.9 | ELD277M160AQ1(1) |
| 160 | 200 | 330 | 22 x 30 | 15 | 1.00 | 0.603 | 1.1 | ELD337M160AQ2(1) |
| 160 | 200 | 390 | 22 x 30 | 15 | 1.15 | 0.737 | 1.2 | ELD397M160AQ2(1) |
| 160 | 200 | 390 | 25 x 25 | 15 | 1.15 | 0.510 | 1.2 | ELD397M160AR1(1) |
| 160 | 200 | 470 | 22 x 35 | 15 | 1.30 | 0.423 | 1.5 | ELD477M160AQ3(1) |
| 160 | 200 | 470 | 25 x 30 | 15 | 1.30 | 0.423 | 1.5 | ELD477M160AR2(1) |
| 160 | 200 | 560 | 22 x 40 | 15 | 1.57 | 0.355 | 1.8 | ELD567M160AQ4(1) |
| 160 | 200 | 560 | 25 x 30 | 15 | 1.50 | 0.355 | 1.8 | ELD567M160AR2(1) |
| 160 | 200 | 560 | 30 x 25 | 15 | 1.54 | 0.355 | 1.8 | ELD567M160AS1(1) |
| 160 | 200 | 680 | 22 x 45 | 15 | 1.75 | 0.293 | 2.2 | ELD687M160AQ5(1) |
| 160 | 200 | 680 | 25 x 35 | 15 | 1.70 | 0.293 | 2.2 | ELD687M160AR3(1) |
| 160 | 200 | 680 | 30 x 30 | 15 | 1.77 | 0.293 | 2.2 | ELD687M160AS2(1) |
| 160 | 200 | 820 | 22 x 50 | 15 | 2.03 | 0.243 | 2.6 | ELD827M160AQ6(1) |
| 160 | 200 | 820 | 25 x 40 | 15 | 1.97 | 0.243 | 2.6 | ELD827M160AR4(1) |
| 160 | 200 | 820 | 30 x 30 | 15 | 1.95 | 0.243 | 2.6 | ELD827M160AS2(1) |
| 160 | 200 | 820 | 35 x 25 | 15 | 1.99 | 0.243 | 2.6 | ELD827M160AT1(1) |
| 160 | 200 | 1000 | 25 x 45 | 15 | 2.15 | 0.199 | 3.0 | ELD108M160AR5(1) |
| 160 | 200 | 1000 | 30 x 35 | 15 | 2.15 | 0.199 | 3.0 | ELD108M160AS3(1) |
| 160 | 200 | 1000 | 35 x 30 | 15 | 2.21 | 0.199 | 3.0 | ELD108M160AT2(1) |
| 160 | 200 | 1200 | 30 x 40 | 15 | 2.45 | 0.166 | 3.0 | ELD128M160AS4(1) |
| 160 | 200 | 1200 | 35 x 35 | 15 | 2.52 | 0.166 | 3.0 | ELD128M160AT3(1) |
| 160 | 200 | 1500 | 30 x 50 | 15 | 2.75 | 0.133 | 3.0 | ELD158M160AS6(1) |
| 160 | 200 | 1500 | 35 x 40 | 15 | 2.75 | 0.133 | 3.0 | ELD158M160AT4(1) |
| 160 | 200 | 1800 | 35 x 45 | 15 | 3.00 | 0.111 | 3.0 | ELD188M160AT5(1) |
| 160 | 200 | 2200 | 35 x 50 | 15 | 3.50 | 0.090 | 3.0 | ELD228M160AT6(1) |
| 180 | 225 | 270 | 22 x 25 | 15 | 0.85 | 0.737 | 1.0 | ELD277M180AQ1(1) |
| 180 | 225 | 330 | 22 x 30 | 15 | 1.10 | 0.603 | 1.2 | ELD337M180AQ2(1) |
| 180 | 225 | 390 | 22 x 35 | 15 | 1.32 | 0.510 | 1.4 | ELD397M180AQ3(1) |
| 180 | 225 | 390 | 25 x 25 | 15 | 1.25 | 0.510 | 1.4 | ELD397M180AR1(1) |
| 180 | 225 | 270 | 22 x 40 | 15 | 1.47 | 0.737 | 1.0 | ELD277M180AQ4(1) |
| 180 | 225 | 470 | 25 x 30 | 15 | 1.40 | 0.423 | 1.7 | ELD477M180AR2(1) |
| 180 | 225 | 560 | 22 x 45 | 15 | 1.70 | 0.355 | 2.0 | ELD567M180AQ5(1) |
| 180 | 225 | 560 | 25 x 35 | 15 | 1.63 | 0.355 | 2.0 | ELD567M180AR3(1) |
| **VDC** | **VDC Surge** | **Rated Capacitance** | **Case Size** | **DF** | **RC** | **ESR** | **LC** | **Part Number** |

*(1) Insert packaging code. See Ordering Options Table for available options.*



Downloaded from Arrow.com.

## Table 1 – Ratings & Part Number Reference cont.

| VDC | VDC Surge Voltage | Rated Capacitance 120 Hz 20°C (µF) | Case Size D x L (mm) | DF 120 Hz 20°C (tan δ %) | RC 120 Hz 105°C (A) | ESR 120 Hz 20°C (Ω) | LC 20°C 5 Minutes (mA) | Part Number |
|---|---|---|---|---|---|---|---|---|
| 180 | 225 | 560 | 30 x 25 | 15 | 1.60 | 0.355 | 2.0 | ELD567M180AS1(1) |
| 180 | 225 | 680 | 22 x 50 | 15 | 1.87 | 0.293 | 2.4 | ELD687M180AQ6(1) |
| 180 | 225 | 680 | 25 x 40 | 15 | 1.82 | 0.293 | 2.4 | ELD687M180AR4(1) |
| 180 | 225 | 680 | 30 x 30 | 15 | 1.80 | 0.293 | 2.4 | ELD687M180AS2(1) |
| 180 | 225 | 680 | 35 x 25 | 15 | 1.84 | 0.293 | 2.4 | ELD687M180AT1(1) |
| 180 | 225 | 820 | 25 x 45 | 15 | 2.05 | 0.243 | 3.0 | ELD827M180AR5(1) |
| 180 | 225 | 820 | 30 x 35 | 15 | 2.05 | 0.243 | 3.0 | ELD827M180AS3(1) |
| 180 | 225 | 820 | 35 x 30 | 15 | 2.11 | 0.243 | 3.0 | ELD827M180AT2(1) |
| 180 | 225 | 1000 | 25 x 50 | 15 | 2.27 | 0.199 | 3.0 | ELD108M180AR6(1) |
| 180 | 225 | 1000 | 30 x 40 | 15 | 2.29 | 0.199 | 3.0 | ELD108M180AS4(1) |
| 180 | 225 | 1000 | 35 x 30 | 15 | 2.25 | 0.199 | 3.0 | ELD108M180AT2(1) |
| 180 | 225 | 1200 | 30 x 45 | 15 | 2.57 | 0.166 | 3.0 | ELD128M180AS5(1) |
| 180 | 225 | 1200 | 35 x 35 | 15 | 2.55 | 0.166 | 3.0 | ELD128M180AT3(1) |
| 180 | 225 | 1500 | 35 x 40 | 15 | 2.85 | 0.133 | 3.0 | ELD158M180AT4(1) |
| 180 | 225 | 1800 | 35 x 50 | 15 | 3.10 | 0.111 | 3.0 | ELD188M180AT6(1) |
| 200 | 250 | 220 | 22 x 25 | 15 | 0.85 | 0.905 | 0.9 | ELD227M200AQ1(1) |
| 200 | 250 | 270 | 22 x 30 | 15 | 1.00 | 0.737 | 1.1 | ELD277M200AQ2(1) |
| 200 | 250 | 330 | 22 x 30 | 15 | 1.15 | 0.603 | 1.3 | ELD337M200AQ2(1) |
| 200 | 250 | 330 | 25 x 25 | 15 | 1.15 | 0.603 | 1.3 | ELD337M200AR1(1) |
| 200 | 250 | 390 | 22 x 35 | 15 | 1.30 | 0.510 | 1.6 | ELD397M200AQ3(1) |
| 200 | 250 | 390 | 25 x 30 | 15 | 1.30 | 0.510 | 1.6 | ELD397M200AR2(1) |
| 200 | 250 | 470 | 22 x 40 | 15 | 1.52 | 0.423 | 1.9 | ELD477M200AQ4(1) |
| 200 | 250 | 470 | 25 x 35 | 15 | 1.54 | 0.423 | 1.9 | ELD477M200AR3(1) |
| 200 | 250 | 470 | 30 x 25 | 15 | 1.49 | 0.423 | 1.9 | ELD477M200AS1(1) |
| 200 | 250 | 560 | 22 x 45 | 15 | 1.70 | 0.355 | 2.2 | ELD567M200AQ5(1) |
| 200 | 250 | 560 | 25 x 35 | 15 | 1.65 | 0.355 | 2.2 | ELD567M200AR3(1) |
| 200 | 250 | 560 | 30 x 30 | 15 | 1.72 | 0.355 | 2.2 | ELD567M200AS2(1) |
| 200 | 250 | 680 | 25 x 45 | 15 | 1.97 | 0.293 | 2.7 | ELD687M200AR5(1) |
| 200 | 250 | 680 | 30 x 35 | 15 | 1.97 | 0.293 | 2.7 | ELD687M200AS3(1) |
| 200 | 250 | 680 | 35 x 30 | 15 | 2.02 | 0.293 | 2.7 | ELD687M200AT2(1) |
| 200 | 250 | 820 | 25 x 45 | 15 | 2.20 | 0.243 | 3.0 | ELD827M200AR5(1) |
| 200 | 250 | 820 | 30 x 35 | 15 | 2.10 | 0.243 | 3.0 | ELD827M200AS3(1) |
| 200 | 250 | 820 | 35 x 30 | 15 | 2.16 | 0.243 | 3.0 | ELD827M200AT2(1) |
| 200 | 250 | 1000 | 30 x 45 | 15 | 2.32 | 0.199 | 3.0 | ELD108M200AS5(1) |
| 200 | 250 | 1000 | 35 x 35 | 15 | 2.30 | 0.199 | 3.0 | ELD108M200AT3(1) |
| 200 | 250 | 1200 | 30 x 50 | 15 | 2.75 | 0.166 | 3.0 | ELD128M200AS6(1) |
| 200 | 250 | 1200 | 35 x 40 | 15 | 2.75 | 0.166 | 3.0 | ELD128M200AT4(1) |
| 200 | 250 | 1500 | 35 x 45 | 15 | 2.90 | 0.133 | 3.0 | ELD158M200AT5(1) |
| 200 | 250 | 1800 | 35X45 | 15 | 2.90 | 0.133 | 3.0 | ELD188M200AT5(1) |
| 250 | 300 | 150 | 22 x 25 | 15 | 0.75 | 1.330 | 0.8 | ELD157M250AQ1(1) |
| 250 | 300 | 180 | 22 x 30 | 15 | 0.75 | 1.110 | 0.9 | ELD187M250AQ2(1) |
| 250 | 300 | 220 | 22 x 30 | 15 | 1.00 | 0.905 | 1.1 | ELD227M250AQ2(1) |
| 250 | 300 | 220 | 25 x 25 | 15 | 1.00 | 0.905 | 1.1 | ELD227M250AR1(1) |
| 250 | 300 | 270 | 22 x 35 | 15 | 1.22 | 0.737 | 1.4 | ELD277M250AQ3(1) |
| 250 | 300 | 270 | 25 x 25 | 15 | 1.15 | 0.737 | 1.4 | ELD277M250AR1(1) |
| 250 | 300 | 330 | 25 x 30 | 15 | 1.36 | 0.603 | 1.7 | ELD337M250AR2(1) |
| 250 | 300 | 330 | 25 x 30 | 15 | 1.30 | 0.603 | 1.7 | ELD337M250AR2(1) |
| 250 | 300 | 390 | 22 x 45 | 15 | 1.54 | 0.510 | 2.0 | ELD397M250AQ5(1) |
| 250 | 300 | 390 | 25 x 35 | 15 | 1.48 | 0.510 | 2.0 | ELD397M250AR3(1) |
| 250 | 300 | 390 | 30 x 25 | 15 | 1.45 | 0.510 | 2.0 | ELD397M250AS1(1) |
| 250 | 300 | 390 | 35 x 25 | 15 | 1.59 | 0.510 | 2.0 | ELD397M250AT1(1) |
| 250 | 300 | 470 | 22 x 50 | 15 | 1.78 | 0.423 | 2.4 | ELD477M250AQ6(1) |
| 250 | 300 | 470 | 25 x 40 | 15 | 1.75 | 0.423 | 2.4 | ELD477M250AR4(1) |
| 250 | 300 | 470 | 30 x 30 | 15 | 1.72 | 0.423 | 2.4 | ELD477M250AS2(1) |
| 250 | 300 | 470 | 35 x 30 | 15 | 1.88 | 0.423 | 2.4 | ELD477M250AT2(1) |
| 250 | 300 | 560 | 25 x 40 | 15 | 1.70 | 0.355 | 2.8 | ELD567M250AR4(1) |
| 250 | 300 | 560 | 30 x 35 | 15 | 1.89 | 0.355 | 2.8 | ELD567M250AS3(1) |
| **VDC** | **VDC Surge** | **Rated Capacitance** | **Case Size** | **DF** | **RC** | **ESR** | **LC** | **Part Number** |

*(1) Insert packaging code. See Ordering Options Table for available options.*



Downloaded from Arrow.com.

## Table 1 – Ratings & Part Number Reference cont.

| VDC | VDC Surge Voltage | Rated Capacitance 120 Hz 20°C (µF) | Case Size D x L (mm) | DF 120 Hz 20°C (tan δ %) | RC 120 Hz 105°C (A) | ESR 120 Hz 20°C (Ω) | LC 20°C 5 Minutes (mA) | Part Number |
|---|---|---|---|---|---|---|---|---|
| 250 | 300 | 560 | 35 x 30 | 15 | 1.94 | 0.355 | 2.8 | ELD567M250AT2(1) |
| 250 | 300 | 680 | 25 x 50 | 15 | 2.10 | 0.293 | 3.0 | ELD687M250AR6(1) |
| 250 | 300 | 680 | 30 x 40 | 15 | 2.10 | 0.293 | 3.0 | ELD687M250AS4(1) |
| 250 | 300 | 680 | 35 x 35 | 15 | 2.18 | 0.293 | 3.0 | ELD687M250AT3(1) |
| 250 | 300 | 820 | 30 x 45 | 15 | 2.30 | 0.243 | 3.0 | ELD827M250AS5(1) |
| 250 | 300 | 820 | 35 x 40 | 15 | 2.39 | 0.243 | 3.0 | ELD827M250AT4(1) |
| 250 | 300 | 1000 | 30 x 50 | 15 | 2.55 | 0.199 | 3.0 | ELD108M250AS6(1) |
| 250 | 300 | 1000 | 35 x 45 | 15 | 2.65 | 0.199 | 3.0 | ELD108M250AT5(1) |
| 250 | 300 | 1200 | 35 x 50 | 15 | 2.90 | 0.166 | 3.0 | ELD128M250AT6(1) |
| 315 | 365 | 82 | 22 x 25 | 15 | 0.55 | 2.426 | 0.5 | ELD826M315AQ1(1) |
| 315 | 365 | 100 | 22 x 30 | 15 | 0.65 | 1.989 | 0.6 | ELD107M315AQ2(1) |
| 315 | 365 | 120 | 22 x 30 | 15 | 0.75 | 1.658 | 0.8 | ELD127M315AQ2(1) |
| 315 | 365 | 120 | 25 x 25 | 15 | 0.75 | 1.658 | 0.8 | ELD127M315AR1(1) |
| 315 | 365 | 150 | 22 x 35 | 15 | 0.80 | 1.326 | 0.9 | ELD157M315AQ3(1) |
| 315 | 365 | 150 | 25 x 30 | 15 | 0.80 | 1.326 | 0.9 | ELD157M315AR2(1) |
| 315 | 365 | 180 | 22 x 40 | 15 | 1.01 | 1.105 | 1.1 | ELD187M315AQ4(1) |
| 315 | 365 | 180 | 25 x 35 | 15 | 1.02 | 1.105 | 1.1 | ELD187M315AR3(1) |
| 315 | 365 | 180 | 30 x 25 | 15 | 1.00 | 1.105 | 1.1 | ELD187M315AS1(1) |
| 315 | 365 | 220 | 22 x 45 | 15 | 1.10 | 0.905 | 1.4 | ELD227M315AQ5(1) |
| 315 | 365 | 220 | 25 x 40 | 15 | 1.12 | 0.905 | 1.4 | ELD227M315AR4(1) |
| 315 | 365 | 220 | 30 x 30 | 15 | 1.10 | 0.905 | 1.4 | ELD227M315AS2(1) |
| 315 | 365 | 270 | 25 x 45 | 15 | 1.25 | 0.737 | 1.7 | ELD277M315AR5(1) |
| 315 | 365 | 270 | 30 x 35 | 15 | 1.25 | 0.737 | 1.7 | ELD277M315AS3(1) |
| 315 | 365 | 330 | 25 x 50 | 15 | 1.53 | 0.603 | 2.1 | ELD337M315AR6(1) |
| 315 | 365 | 330 | 30 x 40 | 15 | 1.53 | 0.603 | 2.1 | ELD337M315AS4(1) |
| 315 | 365 | 330 | 35 x 30 | 15 | 1.50 | 0.603 | 2.1 | ELD337M315AT2(1) |
| 315 | 365 | 390 | 30 x 45 | 15 | 1.71 | 0.510 | 2.5 | ELD397M315AS5(1) |
| 315 | 365 | 390 | 35 x 30 | 15 | 1.60 | 0.510 | 2.5 | ELD397M315AT2(1) |
| 315 | 365 | 470 | 30 x 50 | 15 | 1.85 | 0.423 | 3.0 | ELD477M315AS6(1) |
| 315 | 365 | 470 | 35 x 35 | 15 | 1.75 | 0.423 | 3.0 | ELD477M315AT3(1) |
| 315 | 365 | 560 | 35 x 40 | 15 | 2.00 | 0.355 | 3.0 | ELD567M315AT4(1) |
| 315 | 365 | 680 | 35 x 45 | 15 | 2.20 | 0.293 | 3.0 | ELD687M315AT5(1) |
| 350 | 400 | 82 | 22 x 25 | 15 | 0.60 | 2.426 | 0.6 | ELD826M350AQ1(1) |
| 350 | 400 | 100 | 22 x 30 | 15 | 0.70 | 1.989 | 0.7 | ELD107M350AQ2(1) |
| 350 | 400 | 100 | 25 x 25 | 15 | 0.70 | 1.989 | 0.7 | ELD107M350AR1(1) |
| 350 | 400 | 120 | 22 x 35 | 15 | 0.80 | 1.658 | 0.8 | ELD127M350AQ3(1) |
| 350 | 400 | 120 | 25 x 30 | 15 | 0.80 | 1.658 | 0.8 | ELD127M350AR2(1) |
| 350 | 400 | 150 | 22 x 40 | 15 | 0.86 | 1.326 | 1.1 | ELD157M350AQ4(1) |
| 350 | 400 | 150 | 25 x 35 | 15 | 0.87 | 1.326 | 1.1 | ELD157M350AR3(1) |
| 350 | 400 | 150 | 30 x 25 | 15 | 0.85 | 1.326 | 1.1 | ELD157M350AS1(1) |
| 350 | 400 | 180 | 22 x 45 | 15 | 1.05 | 1.105 | 1.3 | ELD187M350AQ5(1) |
| 350 | 400 | 180 | 25 x 40 | 15 | 1.07 | 1.105 | 1.3 | ELD187M350AR4(1) |
| 350 | 400 | 180 | 30 x 30 | 15 | 1.05 | 1.105 | 1.3 | ELD187M350AS2(1) |
| 350 | 400 | 220 | 22 x 50 | 15 | 1.16 | 0.905 | 1.5 | ELD227M350AQ6(1) |
| 350 | 400 | 220 | 25 x 45 | 15 | 1.20 | 0.905 | 1.5 | ELD227M350AR5(1) |
| 350 | 400 | 220 | 30 x 35 | 15 | 1.18 | 0.905 | 1.5 | ELD227M350AS3(1) |
| 350 | 400 | 220 | 35 x 25 | 15 | 1.15 | 0.905 | 1.5 | ELD227M350AT1(1) |
| 350 | 400 | 270 | 25 x 50 | 15 | 1.31 | 0.737 | 1.9 | ELD277M350AR6(1) |
| 350 | 400 | 270 | 30 x 40 | 15 | 1.33 | 0.737 | 1.9 | ELD277M350AS4(1) |
| 350 | 400 | 270 | 35 x 30 | 15 | 1.30 | 0.737 | 1.9 | ELD277M350AT2(1) |
| 350 | 400 | 330 | 30 x 45 | 15 | 1.46 | 0.603 | 2.3 | ELD337M350AS5(1) |
| 350 | 400 | 330 | 35 x 35 | 15 | 1.45 | 0.603 | 2.3 | ELD337M350AT3(1) |
| 350 | 400 | 390 | 30 x 50 | 15 | 1.65 | 0.510 | 2.7 | ELD397M350AS6(1) |
| 350 | 400 | 390 | 35 x 40 | 15 | 1.65 | 0.510 | 2.7 | ELD397M350AT4(1) |
| 350 | 400 | 470 | 35 x 45 | 15 | 1.85 | 0.423 | 3.0 | ELD477M350AT5(1) |
| 350 | 400 | 560 | 35 x 50 | 15 | 2.10 | 0.355 | 3.0 | ELD567M350AT6(1) |
| 400 | 450 | 68 | 22 x 25 | 15 | 0.55 | 2.926 | 0.5 | ELD686M400AQ1(1) |
| **VDC** | **VDC Surge** | **Rated Capacitance** | **Case Size** | **DF** | **RC** | **ESR** | **LC** | **Part Number** |

*(1) Insert packaging code. See Ordering Options Table for available options.*



Downloaded from Arrow.com.

## Table 1 – Ratings & Part Number Reference cont.

| VDC | VDC Surge Voltage | Rated Capacitance 120 Hz 20°C (µF) | Case Size D x L (mm) | DF 120 Hz 20°C (tan δ %) | RC 120 Hz 105°C (A) | ESR 120 Hz 20°C (Ω) | LC 20°C 5 Minutes (mA) | Part Number |
|---|---|---|---|---|---|---|---|---|
| 400 | 450 | 82 | 22 x 30 | 15 | 0.65 | 2.426 | 0.7 | ELD826M400AQ2(1) |
| 400 | 450 | 82 | 25 x 25 | 15 | 0.65 | 2.426 | 0.7 | ELD826M400AR1(1) |
| 400 | 450 | 100 | 22 x 35 | 15 | 0.79 | 1.989 | 0.8 | ELD107M400AQ3(1) |
| 400 | 450 | 100 | 25 x 25 | 15 | 0.75 | 1.989 | 0.8 | ELD107M400AR1(1) |
| 400 | 450 | 120 | 22 x 40 | 15 | 0.89 | 1.658 | 1.0 | ELD127M400AQ4(1) |
| 400 | 450 | 120 | 25 x 30 | 15 | 0.85 | 1.658 | 1.0 | ELD127M400AR2(1) |
| 400 | 450 | 120 | 30 x 25 | 15 | 0.87 | 1.658 | 1.0 | ELD127M400AS1(1) |
| 400 | 450 | 150 | 22 x 45 | 15 | 0.93 | 1.326 | 1.2 | ELD157M400AQ5(1) |
| 400 | 450 | 150 | 25 x 35 | 15 | 0.90 | 1.326 | 1.2 | ELD157M400AR3(1) |
| 400 | 450 | 150 | 30 x 30 | 15 | 0.94 | 1.326 | 1.2 | ELD157M400AS2(1) |
| 400 | 450 | 150 | 35 x 25 | 15 | 0.96 | 1.326 | 1.2 | ELD157M400AT1(1) |
| 400 | 450 | 180 | 22 x 50 | 15 | 1.14 | 1.105 | 1.4 | ELD187M400AQ6(1) |
| 400 | 450 | 180 | 25 x 40 | 15 | 1.11 | 1.105 | 1.4 | ELD187M400AR4(1) |
| 400 | 450 | 180 | 30 x 30 | 15 | 1.10 | 1.105 | 1.4 | ELD187M400AS2(1) |
| 400 | 450 | 180 | 35 x 25 | 15 | 1.12 | 1.105 | 1.4 | ELD187M400AT1(1) |
| 400 | 450 | 220 | 25 x 45 | 15 | 1.20 | 0.905 | 1.8 | ELD227M400AR5(1) |
| 400 | 450 | 220 | 30 x 35 | 15 | 1.20 | 0.905 | 1.8 | ELD227M400AS3(1) |
| 400 | 450 | 220 | 35 x 30 | 15 | 1.24 | 0.905 | 1.8 | ELD227M400AT2(1) |
| 400 | 450 | 270 | 25 x 50 | 15 | 1.36 | 0.737 | 2.2 | ELD277M400AR6(1) |
| 400 | 450 | 270 | 30 x 40 | 15 | 1.38 | 0.737 | 2.2 | ELD277M400AS4(1) |
| 400 | 450 | 270 | 35 x 30 | 15 | 1.35 | 0.737 | 2.2 | ELD277M400AT2(1) |
| 400 | 450 | 330 | 30 x 45 | 15 | 1.51 | 0.603 | 2.6 | ELD337M400AS5(1) |
| 400 | 450 | 330 | 35 x 35 | 15 | 1.50 | 0.603 | 2.6 | ELD337M400AT3(1) |
| 400 | 450 | 390 | 30 x 50 | 15 | 1.70 | 0.510 | 3.0 | ELD397M400AS6(1) |
| 400 | 450 | 390 | 35 x 40 | 15 | 1.70 | 0.510 | 3.0 | ELD397M400AT4(1) |
| 400 | 450 | 470 | 35 x 45 | 15 | 1.90 | 0.705 | 3.0 | ELD477M400AT5(1) |
| 450 | 500 | 56 | 22 x 25 | 25 | 0.55 | 5.921 | 0.5 | ELD566M450AQ1(1) |
| 450 | 500 | 68 | 22 x 30 | 25 | 0.65 | 4.876 | 0.6 | ELD686M450AQ2(1) |
| 450 | 500 | 82 | 22 x 35 | 25 | 0.80 | 4.044 | 0.7 | ELD826M450AQ3(1) |
| 450 | 500 | 82 | 25 x 25 | 25 | 0.75 | 4.044 | 0.7 | ELD826M450AR1(1) |
| 450 | 500 | 100 | 22 x 40 | 25 | 0.89 | 3.316 | 0.9 | ELD107M450AQ4(1) |
| 450 | 500 | 100 | 25 x 30 | 25 | 0.85 | 3.316 | 0.9 | ELD107M450AR2(1) |
| 450 | 500 | 120 | 22 x 45 | 25 | 0.95 | 2.763 | 1.1 | ELD127M450AQ5(1) |
| 450 | 500 | 120 | 25 x 35 | 25 | 0.92 | 2.763 | 1.1 | ELD127M450AR3(1) |
| 450 | 500 | 120 | 30 x 25 | 25 | 0.90 | 2.763 | 1.1 | ELD127M450AS1(1) |
| 450 | 500 | 150 | 22 x 50 | 25 | 1.14 | 2.210 | 1.4 | ELD157M450AQ6(1) |
| 450 | 500 | 150 | 25 x 40 | 25 | 1.11 | 2.210 | 1.4 | ELD157M450AR4(1) |
| 450 | 500 | 150 | 30 x 30 | 25 | 1.10 | 2.210 | 1.4 | ELD157M450AS2(1) |
| 450 | 500 | 180 | 25 x 45 | 25 | 1.25 | 1.842 | 1.6 | ELD187M450AR5(1) |
| 450 | 500 | 180 | 30 x 35 | 25 | 1.24 | 1.842 | 1.6 | ELD187M450AS3(1) |
| 450 | 500 | 180 | 35 x 25 | 25 | 1.20 | 1.842 | 1.6 | ELD187M450AT1(1) |
| 450 | 500 | 220 | 25 x 50 | 25 | 1.36 | 1.507 | 2.0 | ELD227M450AR6(1) |
| 450 | 500 | 220 | 30 x 40 | 25 | 1.38 | 1.507 | 2.0 | ELD227M450AS4(1) |
| 450 | 500 | 220 | 35 x 30 | 25 | 1.32 | 1.507 | 2.0 | ELD227M450AT2(1) |
| 450 | 500 | 270 | 30 x 45 | 25 | 1.51 | 1.228 | 2.4 | ELD277M450AS5(1) |
| 450 | 500 | 270 | 35 x 35 | 25 | 1.50 | 1.228 | 2.4 | ELD277M450AT3(1) |
| 450 | 500 | 330 | 30 x 50 | 25 | 1.70 | 1.005 | 3.0 | ELD337M450AS6(1) |
| 450 | 500 | 330 | 35 x 40 | 25 | 1.70 | 1.005 | 3.0 | ELD337M450AT4(1) |
| 450 | 500 | 390 | 35 x 45 | 25 | 1.90 | 0.850 | 3.0 | ELD397M450AT5(1) |
| 450 | 500 | 470 | 35 x 50 | 25 | 2.10 | 0.705 | 3.0 | ELD477M450AT6(1) |
| 500 | 550 | 47 | 22 x 25 | 25 | 0.51 | 7.055 | 0.5 | ELD476M500AQ1(1) |
| 500 | 550 | 56 | 22 x 30 | 25 | 0.58 | 5.912 | 0.6 | ELD566M500AQ2(1) |
| 500 | 550 | 68 | 25 x 25 | 25 | 0.65 | 4.876 | 0.7 | ELD686M500AR1(1) |
| 500 | 550 | 82 | 22 x 35 | 25 | 0.72 | 4.044 | 0.8 | ELD826M500AQ3(1) |
| 500 | 550 | 82 | 25 x 30 | 25 | 0.74 | 4.044 | 0.8 | ELD826M500AR2(1) |
| 500 | 550 | 100 | 22 x 45 | 25 | 0.83 | 3.316 | 1.0 | ELD107M500AQ5(1) |
| 500 | 550 | 100 | 30 x 25 | 25 | 0.82 | 3.316 | 1.0 | ELD107M500AS1(1) |
| **VDC** | **VDC Surge** | **Rated Capacitance** | **Case Size** | **DF** | **RC** | **ESR** | **LC** | **Part Number** |

*(1) Insert packaging code. See Ordering Options Table for available options.*



Downloaded from Arrow.com.

## Table 1 – Ratings & Part Number Reference cont.

| VDC | VDC Surge Voltage | Rated Capacitance 120 Hz 20°C (µF) | Case Size D x L (mm) | DF 120 Hz 20°C (tan δ %) | RC 120 Hz 105°C (A) | ESR 120 Hz 20°C (Ω) | LC 20°C 5 Minutes (mA) | Part Number |
|---|---|---|---|---|---|---|---|---|
| 500 | 550 | 120 | 22 x 50 | 25 | 0.93 | 2.763 | 1.2 | ELD127M500AQ6(1) |
| 500 | 550 | 120 | 25 x 35 | 25 | 0.93 | 2.763 | 1.2 | ELD127M500AR3(1) |
| 500 | 550 | 120 | 30 x 30 | 25 | 0.91 | 2.763 | 1.2 | ELD127M500AS2(1) |
| 500 | 550 | 150 | 25 x 45 | 25 | 1.08 | 2.210 | 1.5 | ELD157M500AR5(1) |
| 500 | 550 | 150 | 30 x 35 | 25 | 1.04 | 2.210 | 1.5 | ELD157M500AS3(1) |
| 500 | 550 | 150 | 35 x 25 | 25 | 0.99 | 2.210 | 1.5 | ELD157M500AT1(1) |
| 500 | 550 | 180 | 25 x 50 | 25 | 1.20 | 1.842 | 1.8 | ELD187M500AR6(1) |
| 500 | 550 | 180 | 30 x 40 | 25 | 1.17 | 1.842 | 1.8 | ELD187M500AS4(1) |
| 500 | 550 | 180 | 35 x 30 | 25 | 1.10 | 1.842 | 1.8 | ELD187M500AT2(1) |
| 500 | 550 | 220 | 30 x 45 | 25 | 1.33 | 1.507 | 2.2 | ELD227M500AS5(1) |
| 500 | 550 | 220 | 35 x 35 | 25 | 1.23 | 1.507 | 2.2 | ELD227M500AT3(1) |
| 500 | 550 | 270 | 30 x 50 | 25 | 1.50 | 1.228 | 2.7 | ELD277M500AS6(1) |
| 500 | 550 | 270 | 35 x 40 | 25 | 1.42 | 1.228 | 2.7 | ELD277M500AT4(1) |
| 500 | 550 | 330 | 35 x 45 | 25 | 1.60 | 1.005 | 3.0 | ELD337M500AT5(1) |
| 500 | 550 | 390 | 35 x 50 | 25 | 1.78 | 0.850 | 3.0 | ELD397M500AT6(1) |
| 500 | 550 | 470 | 35 x 60 | 25 | 2.03 | 0.705 | 3.0 | ELD477M500AT8(1) |
| 550 | 600 | 180 | 30x45 | 25 | 1.26 | 1.842 | 2.0 | ELD187M550AS5(1) |
| 550 | 600 | 180 | 35x35 | 25 | 1.24 | 1.842 | 2.0 | ELD187M550AT3(1) |
| 550 | 600 | 220 | 30x50 | 25 | 1.45 | 1.507 | 2.4 | ELD227M550AS6(1) |
| 550 | 600 | 220 | 35x40 | 25 | 1.45 | 1.507 | 2.4 | ELD227M550AT4(1) |
| 550 | 600 | 270 | 35x45 | 25 | 1.68 | 1.228 | 3.0 | ELD277M550AT5(1) |
| 550 | 600 | 330 | 35x50 | 25 | 1.95 | 1.005 | 3.0 | ELD337M550AT6(1) |
| 550 | 600 | 390 | 35x60 | 25 | 2.12 | 0.85 | 3.0 | ELD397M550AT8(1) |
| 550 | 600 | 470 | 35x60 | 25 | 2.2 | 0.705 | 3.0 | ELD477M550AT8(1) |
| **VDC** | **VDC Surge** | **Rated Capacitance** | **Case Size** | **DF** | **RC** | **ESR** | **LC** | **Part Number** |

*(1) Insert packaging code. See Ordering Options Table for available options.*



Downloaded from Arrow.com.

## Mounting Positions (Safety Vent)

In operation, electrolytic capacitors will always conduct a leakage current, which causes electrolysis. The oxygen produced by electrolysis will regenerate the dielectric layer but, at the same time, the hydrogen released may cause the internal pressure of the capacitor to increase. The overpressure vent, or safety vent, ensures that the gas can escape when the pressure reaches a certain value. All mounting positions must allow the safety vent to work properly.

## Installing

- As a general principle, lower-use temperatures result in a longer, useful life of the capacitor. For this reason, it should be ensured that electrolytic capacitors are placed away from heat-emitting components. Adequate space should be allowed between components for cooling air to circulate, particularly when high ripple current loads are applied. In any case, the maximum category temperature must not be exceeded.
- Do not deform the case of the capacitors or use capacitors with a deformed case.
- Verify that the connections of the capacitors are able to insert on the board without excessive mechanical force.
- If the capacitors require mounting through additional means, the recommended mounting accessories shall be used.
- Verify the correct polarization of the capacitor on the board.
- Verify that the space around the pressure relief device is according to the following guideline:

| Case Diameter | Space Around Safety Vent |
|---|---|
| ≤ 16 mm | > 2 mm |
| > 16 to ≤ 40 mm | > 3 mm |
| > 40 mm | > 5 mm |

It is recommended that capacitors always be mounted with the safety device uppermost or in the upper part of the capacitor.

- If the capacitors are stored for a long time, the leakage current must be verified. If the leakage current is superior to the value listed in this catalog, the capacitors must be reformed. In this case, they can be reformed by application of the rated voltage through a series resistor approximately 1 kΩ for capacitors with $V_R$ ≤ 160 V (5 W resistor) and 10 kΩ for the other rated voltages.
- In the case of capacitors connected in a series, a suitable voltage sharing must be used.
  In the case of balancing resistors, the approximate resistance value can be calculated as: R = 60/C.

KEMET recommends, nevertheless, to ensure that the voltage across each capacitor does not exceed its rated voltage.



Downloaded from Arrow.com.

## Application & Operation Guidelines

**Electrical Ratings:**
**Capacitance (ESC)**

*Simplified equivalent circuit diagram of an electrolytic capacitor*

The capacitive component of the equivalent series circuit, (equivalent series capacitance - ESC), is determined by applying an alternate voltage of ≤ 0.5 V at a frequency of 120 or 100 Hz and 20°C (IEC 384-1, 384-4).

**Temperature Dependence of the Capacitance**
Capacitance of an electrolytic capacitor depends upon temperature: with decreasing temperature the viscosity of the electrolyte increases, thereby reducing its conductivity.
Capacitance will decrease if temperature decreases. Furthermore, temperature drifts cause armature dilatation and, therefore, capacitance changes (up to 20% depending on the series considered, from 0 to 80°C). This phenomenon is more evident for electrolytic capacitors than for other types.

**Frequency Dependence of the Capacitance**
Effective capacitance value is derived from the impedance curve, as long as impedance is still in the range where the capacitance component is dominant.

$$C = \frac{1}{2\pi f Z}$$

C = capacitance (F)
f = frequency (Hz)
Z = impedance (Ω)

**Dissipation Factor tan δ (DF)**
Dissipation Factor tan δ is the ratio between the active and reactive power for a sinusoidal waveform voltage. It can be thought of as a measurement of the gap between an actual and ideal capacitor.

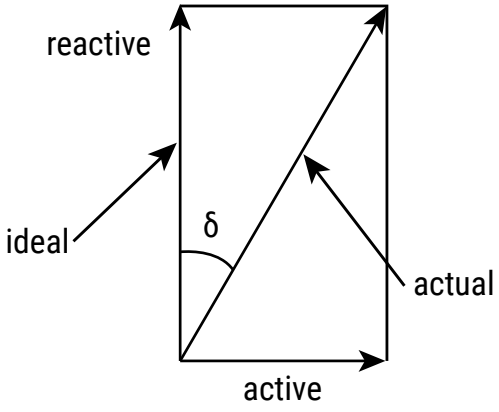


Tan δ is measured with the same set-up used for the series capacitance ESC.
Tan δ = ω x ESC x ESR where:
ESC = Equivalent series capacitance
ESR = Equivalent series resistance



Downloaded from Arrow.com.

## Application & Operation Guidelines cont.

**Equivalent Series Inductance (ESL)**
Equivalent series inductance or self inductance results from the terminal configuration and internal design of the capacitor.

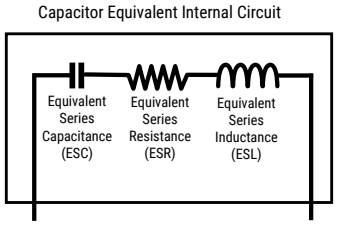


**Equivalent Series Resistance (ESR)**
Equivalent series resistance is the resistive component of the equivalent series circuit. ESR value depends on frequency and temperature, and is related to the tan δ by the following equation:

$$ESR = \frac{\tan \delta}{2\pi f\ ESC}$$

ESR = Equivalent series resistance (Ω)
tan δ = Dissipation factor
ESC = Equivalent series capacitance (F)
f = Frequency (Hz)

Tolerance limits of the rated capacitance must be taken into account when calculating this value.

**Impedance (Z)**
Impedance of an electrolytic capacitor results from a circuit formed by the following individual equivalent series components:

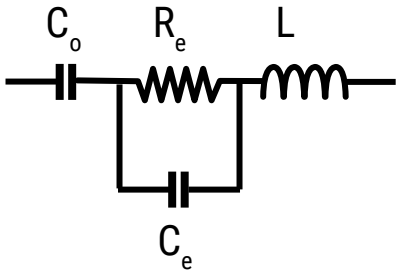


$C_o$ = Aluminum oxide capacitance (surface and thickness of the dielectric.)
$R_e$ = Resistance of electrolyte and paper mixture (other resistances not depending on the frequency are not considered: tabs, plates, etc.)
$C_e$ = Electrolyte soaked paper capacitance.
L = Inductive reactance of the capacitor winding and terminals.
Impedance of an electrolytic capacitor is not a constant quantity that retains its value under all conditions; it changes depending on frequency and temperature.
Impedance as a function of frequency (sinusoidal waveform) for a certain temperature can be represented as follows:



Downloaded from Arrow.com.

## Application & Operation Guidelines cont.

**Impedance (Z) cont.**

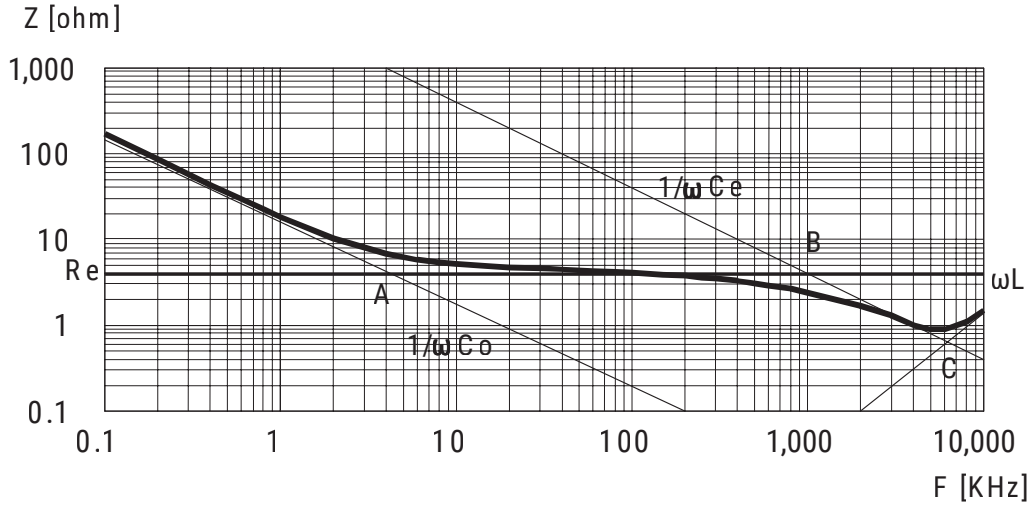


- Capacitive reactance predominates at low frequencies.
- With increasing frequency, capacitive reactance $Xc = 1/\omega C_o$ decreases until it reaches the order of magnitude of electrolyte resistance $R_e$(A)
- At even higher frequencies, resistance of the electrolyte predominates: $Z = R_e$ (A - B)
- When the capacitor's resonance frequency is reached ($\omega_0$), capacitive and inductive reactance mutually cancel each other $1/\omega C_e = \omega L$, $\omega_0 = 1/SQR(LC_e)$
- Above this frequency, inductive reactance of the winding and its terminals (XL = Z = ωL) becomes effective and leads to an increase in impedance

Generally speaking, it can be estimated that $C_e \approx 0.01\ C_o$.

Impedance as a function of frequency (sinusoidal waveform) for different temperature values can be represented as follows (typical values):

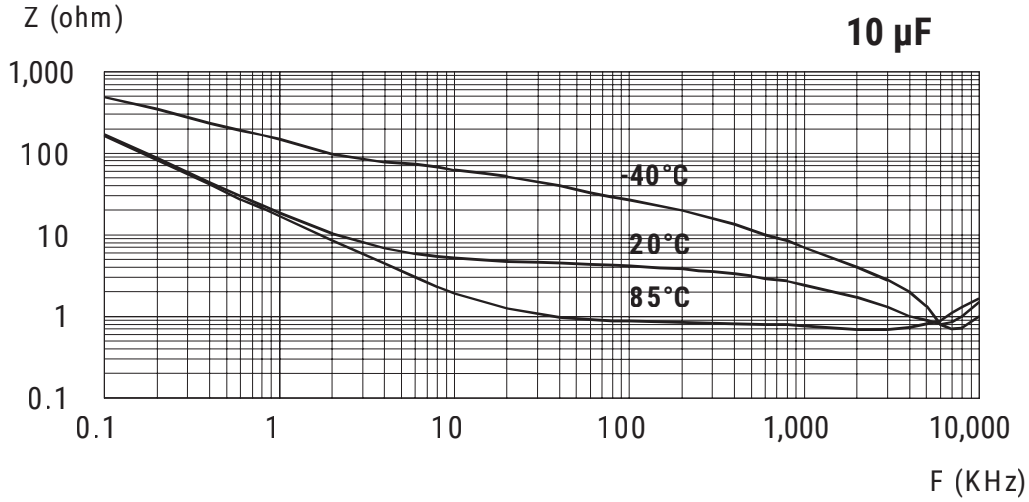


$R_e$ is the most temperature-dependent component of an electrolytic capacitor equivalent circuit. Electrolyte resistivity will decrease if temperature rises.
In order to obtain a low impedance value throughout the temperature range, $R_e$ must be as little as possible. However, $R_e$ values that are too low indicate a very aggressive electrolyte, resulting in a shorter life of the electrolytic capacitor at high temperatures. A compromise must be reached.



Downloaded from Arrow.com.

## Application & Operation Guidelines cont.

**Leakage Current (LC)**
Due to the aluminum oxide layer that serves as a dielectric, a small current will continue to flow even after a DC voltage has been applied for long periods. This current is called leakage current.

A high leakage current flows after applying voltage to the capacitor then decreases in a few minutes, for example, after prolonged storage without any applied voltage. In the course of continuous operation, the leakage current will decrease and reach an almost constant value.

After a voltage-free storage the oxide layer may deteriorate, especially at a high temperature. Since there are no leakage currents to transport oxygen ions to the anode, the oxide layer is not regenerated. The result is that a higher than normal leakage current will flow when voltage is applied after prolonged storage.

As the oxide layer is regenerated in use, the leakage current will gradually decrease to its normal level.
The relationship between the leakage current and voltage applied at constant temperature can be shown schematically as follows:

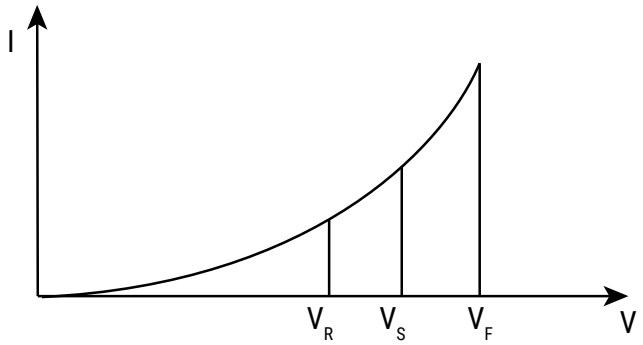


Where:
$V_F$ = Forming voltage
If this level is exceeded, a large quantity of heat and gas will be generated and the capacitor could be damaged.
$V_R$ = Rated voltage
This level represents the top of the linear part of the curve.
$V_S$ = Surge voltage
This lies between $V_R$ and $V_F$. The capacitor can be subjected to $V_S$ for short periods only.

Electrolytic capacitors are subjected to a reforming process before acceptance testing. The purpose of this preconditioning is to ensure that the same initial conditions are maintained when comparing different products.

**Ripple Current (RC)**
The maximum ripple current value depends on:
- Ambient temperature
- Surface area of the capacitor (heat dissipation area)
tan δ or ESR
- Frequency

The capacitor's life depends on the thermal stress.



Downloaded from Arrow.com.

## Application & Operation Guidelines cont.

**Frequency Dependence of the Ripple Current**
ESR and, thus, the tan δ depend on the frequency of the applied voltage. This indicates that the allowed ripple current is also a function of the frequency.

**Temperature Dependence of the Ripple Current**
The data sheet specifies maximum ripple current at the upper category temperature for each capacitor.

**Expected Life Calculation**
Expected life depends on operating temperature according to the following formula: $L = Lo \times 2^{(To-T)/10}$
Where:

L: Expected life
Lo: Load life at a maximum permissible operating temperature
T: Actual operating temperature
To: Maximum permissible operating temperature

This formula is applicable between 40°C and To.

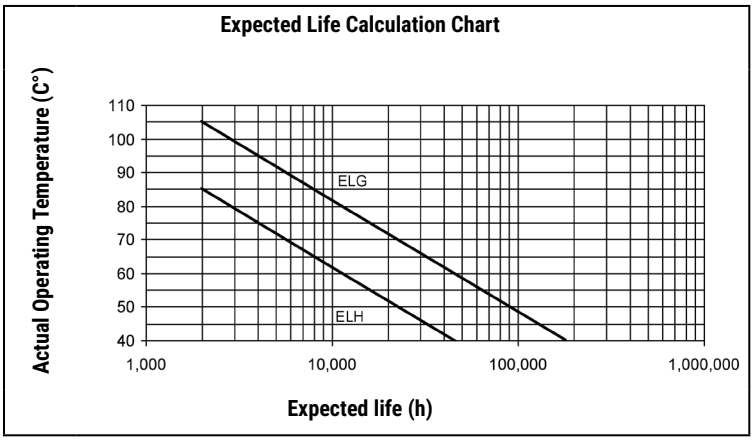




Downloaded from Arrow.com.

## Packaging Quantities

| Size Code | Diameter (mm) | Length (mm) | Bulk Standard Leads |
|---|---|---|---|
| Q1 | 22 | 25 | 400 |
| Q2 | 22 | 30 | 400 |
| Q3 | 22 | 35 | 400 |
| Q4 | 22 | 40 | 400 |
| Q5 | 22 | 45 | 400 |
| Q6 | 22 | 50 | 400 |
| R1 | 25 | 25 | 200 |
| R2 | 25 | 30 | 200 |
| R3 | 25 | 35 | 200 |
| R4 | 25 | 40 | 200 |
| R5 | 25 | 45 | 200 |
| R6 | 25 | 50 | 200 |
| S1 | 30 | 25 | 200 |
| S2 | 30 | 30 | 200 |
| S3 | 30 | 35 | 200 |
| S4 | 30 | 40 | 200 |
| S5 | 30 | 45 | 200 |
| S6 | 30 | 50 | 200 |
| T1 | 35 | 25 | 200 |
| T2 | 35 | 30 | 200 |
| T3 | 35 | 35 | 200 |
| T4 | 35 | 40 | 200 |
| T5 | 35 | 45 | 200 |
| T6 | 35 | 50 | 200 |
| T8 | 35 | 60 | 200 |



Downloaded from Arrow.com.

## Marking

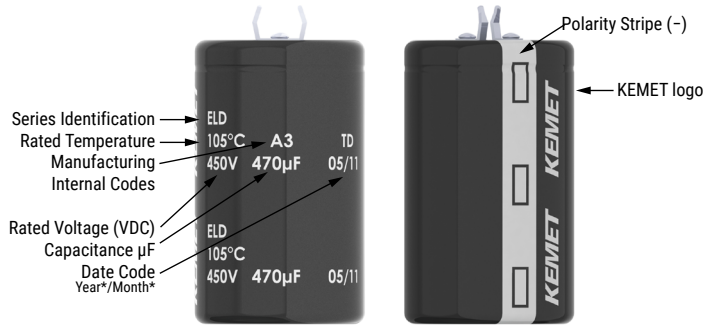


*Y = Year

| Code | 19 | 20 | 21 | 22 | 23 | 24 | 25 | 26 | 27 |
|---|---|---|---|---|---|---|---|---|---|
| Year | 2019 | 2020 | 2021 | 2022 | 2023 | 2024 | 2025 | 2026 | 2027 |

*M = Month

| Code | 01 | 02 | 03 | 04 | 05 | 06 | 07 | 08 | 09 | 10 | 11 | 12 |
|---|---|---|---|---|---|---|---|---|---|---|---|---|
| Month | 1 | 2 | 3 | 4 | 5 | 6 | 7 | 8 | 9 | 10 | 11 | 12 |

** Image for reference only. A slight change in the layout can occur, not affecting the marking content. This change will not impact the product's form, fit, or function, as the products remain equivalent in physical, mechanical, quality, and reliability characteristics.

## Construction

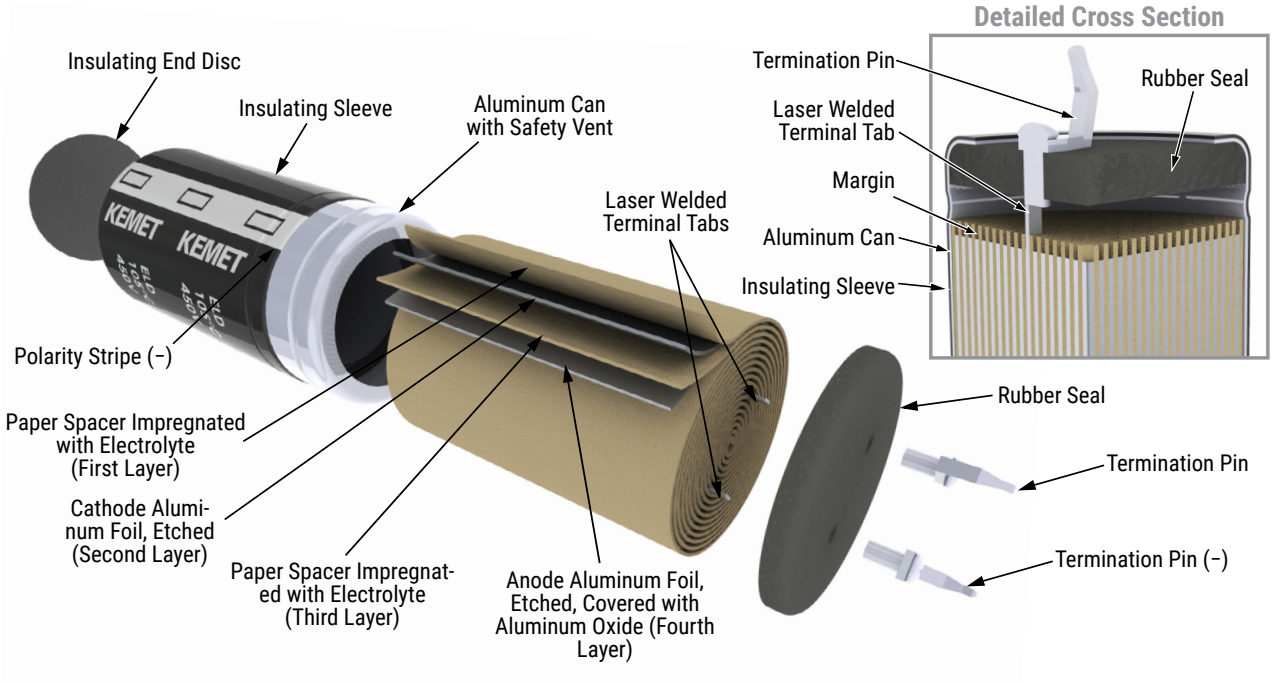




Downloaded from Arrow.com.

## Construction Data

The manufacturing process begins with the anode foil being electrochemically etched to increase the surface area and then "formed" to produce the aluminum oxide layer. Both the anode and cathode foils are then interleaved with absorbent paper and wound into a cylinder. During the winding process, aluminum tabs are attached to each foil to provide the electrical contact.

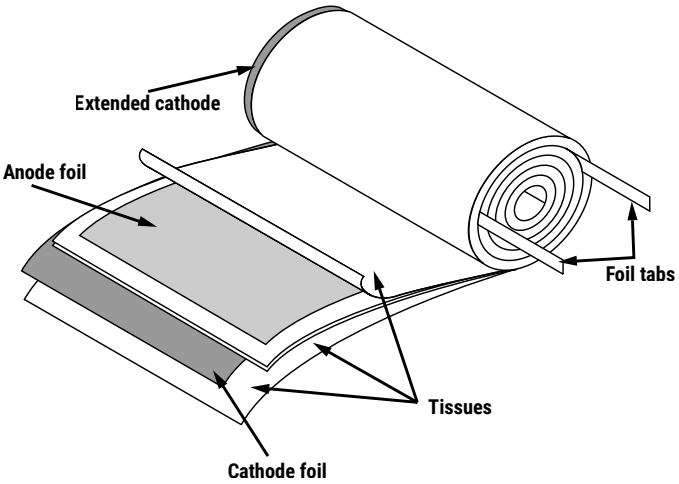


The deck, complete with terminals, is attached to the tabs and then folded down to rest on top of the winding. The complete winding is impregnated with electrolyte before being housed in a suitable container, usually an aluminum can, and sealed. Throughout the process, all materials inside the housing must be maintained at the highest purity and be compatible with the electrolyte.

Each capacitor is aged and tested before being sleeved and packed. The purpose of aging is to repair any damage in the oxide layer and thus reduce the leakage current to a very low level. Aging is normally carried out at the rated temperature of the capacitor and is accomplished by applying voltage to the device while carefully controlling the supply current. The process may take several hours to complete.

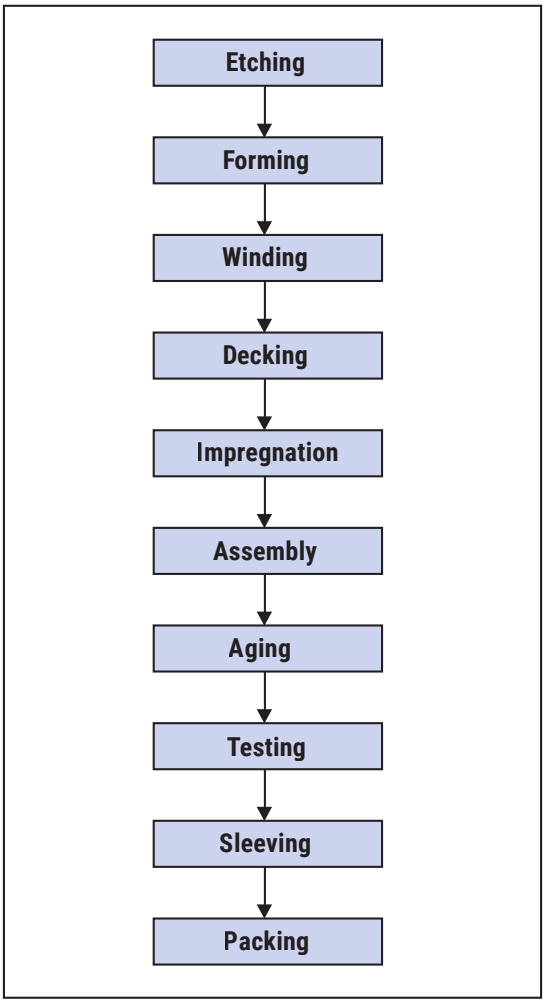


Damage to the oxide layer can occur due to variety of reasons:

- Slitting of the anode foil after forming
- Attaching the tabs to the anode foil
- Minor mechanical damage caused during winding

A sample from each batch is taken by the quality department after completion of the production process. This sample size is controlled by the use of recognized sampling tables defined in BS 6001.

The following tests are applied and may be varied at the request of the customer. In this case the batch, or special procedure, will determine the course of action.

Electrical:

- Leakage current
- Capacitance
- ESR
- Impedance
- Tan Delta

Mechanical/Visual:

- Overall dimensions
- Torque test of mounting stud
- Print detail
- Box labels
- Packaging, including packed quantity



Downloaded from Arrow.com.

## KEMET Electronics Corporation Sales Offices

For a complete list of our global sales offices, please visit https://www.yageogroup.com/SalesResources/SalesOffices

## Disclaimer

YAGEO Corporation and its affiliates do not recommend the use of commercial or automotive grade products for high reliability applications or manned space flight.

All product specifications, statements, information and data (collectively, the "Information") in this datasheet are subject to change. The customer is responsible for checking and verifying the extent to which the Information contained in this publication is applicable to an order at the time the order is placed. All Information given herein is believed to be accurate and reliable, but it is presented without guarantee, warranty, or responsibility of any kind, expressed or implied.

Statements of suitability for certain applications are based on KEMET Electronics Corporation's ("KEMET") knowledge of typical operating conditions for such applications, but are not intended to constitute – and KEMET specifically disclaims – any warranty concerning suitability for a specific customer application or use. The Information is intended for use only by customers who have the requisite experience and capability to determine the correct products for their application. Any technical advice inferred from this Information or otherwise provided by KEMET with reference to the use of KEMET's products is given gratis, and KEMET assumes no obligation or liability for the advice given or results obtained.

Although KEMET designs and manufactures its products to the most stringent quality and safety standards, given the current state of the art, isolated component failures may still occur. Accordingly, customer applications which require a high degree of reliability or safety should employ suitable designs or other safeguards (such as installation of protective circuitry or redundancies) in order to ensure that the failure of an electrical component does not result in a risk of personal injury or property damage.

Although all product–related warnings, cautions and notes must be observed, the customer should not assume that all safety measures are indicated or that other measures may not be required.

KEMET requires its products to be packaged and shipped on pallets. This is because KEMET's products are specifically designed to be packed onto pallets during shipment. If for any reason, the products are removed from pallets by the shipping party and shipped to the end customer, then additional external protection is required. In this instance, an external box with two carton layers and an upwards orientation sticker must be used by the shipping party, with the empty space filled with filling material, and afterwards sealing the box. If this packing and packaging guideline is not followed by the shipping party, the shipping party, and not KEMET, will be held responsible for any packaging, packing and/or product damages upon delivery of the products to the end customer. KEMET hereby disclaims any liability for damages to the products or otherwise that have been, or threaten to be, inflicted, result from or are in any way related to the packaging, packing or damage by the shipping party in contravention of the packing and packaging guidelines herein.

*KEMET is a registered trademark of KEMET Electronics Corporation.*



Downloaded from Arrow.com.