Data Sheet | Item Number: 216-103

Ferrule; Sleeve for 1 mm² / AWG 18; uninsulated; electro-tin plated

https://www.wago.com/216-103

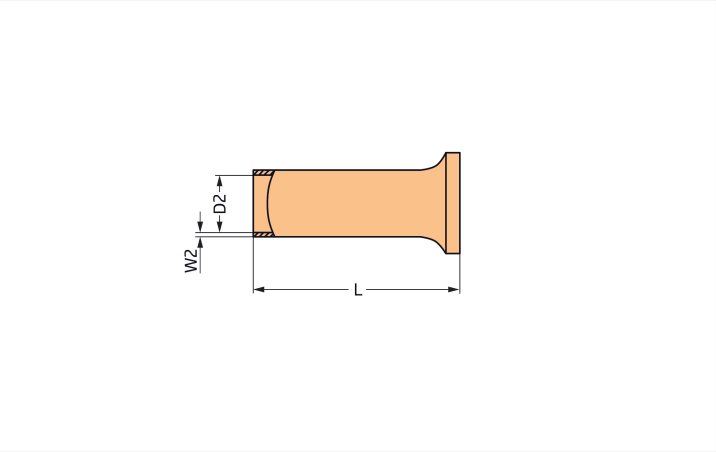

Dimensions in mm

Connection Data	
Metric cross-section of the ferrule	1 mm²
Strip length	8 mm / 0.31 inches
Cross-section (AWG) of ferrule	18 AWG

Physical data	
Total length (L)	8 mm
Wall thickness of crimp sleeve (W2)	0.15 mm
Diameter crimp sleeve inside (D2)	1.4 mm

Mechanical data	
Plastic collar	No

Material data	
Weight	0.1 g

Commercial data	
Product Group	2 (Terminal Block Accessories)
PU (SPU)	5000 (1000) pcs
Packaging type	Box
Country of origin	DE
GTIN	4017332277655
Customs tariff number	85369010000

Downloaded from Arrow.com.

Product Classification

UNSPSC	39121405
eCl@ss 10.0	27-40-02-01
eCl@ss 9.0	27-40-02-01
ETIM 9.0	EC000005
ETIM 10.0	EC000005
ECCN	NO US CLASSIFICATION

Environmental Product Compliance

RoHS Compliance Status	Compliant,No Exemption

Downloads

Environmental Product Compliance

Compliance Search

Environmental Product Compliance 216-103

Documentation

Bid Text

216-103	11.09.2017	doc 24.50 KB	
216-103	19.02.2019	xml 2.77 KB	

CAD/CAE-Data

CAD data

2D/3D Models 216-103

Installation Notes

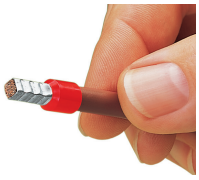

A perfect gas-tight crimp – both electrically and mechanically reliable

Downloaded from Arrow.com.