THIS DRAWING IS UNPUBLISHED. RELEASED FOR PUBLICATION 2012
© COPYRIGHT 2012 Tyco Electronics AMP GmbH ALL RIGHTS RESERVED.

LOC	DIST
A1	-

REVISIONS

F	LTR	DESCRIPTION	DATE	DWN	APVD
	A21	ECR-16-016696	17DEC2016	GCM	MKO
	A22	ECR-16-016780	15NOV2017	GR	MKO
	A23	ECR-17-014013	26MAR2018	SG	MKO
	A24	ECR-21-123564	14MAR2022	RK	JB

PN 0-2.0-3.0-8 & 1-2

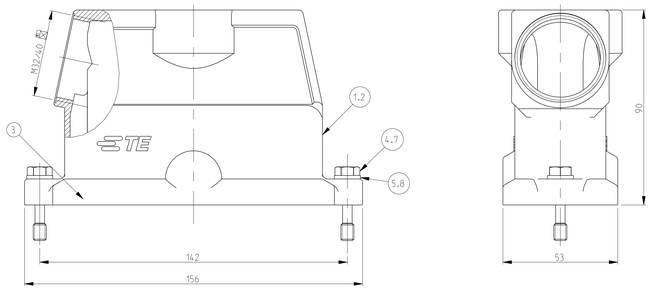

PN 0-9.1-0.1-1.1-4.1-8 & 1-9

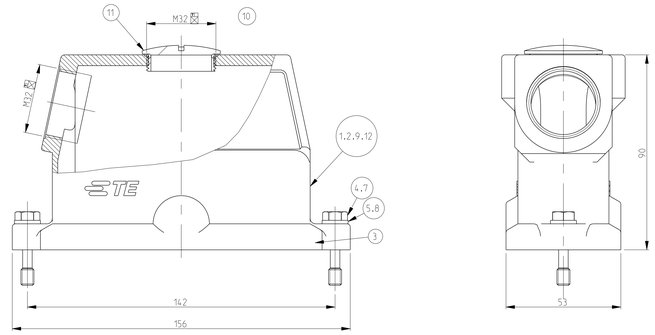

PN 0-7

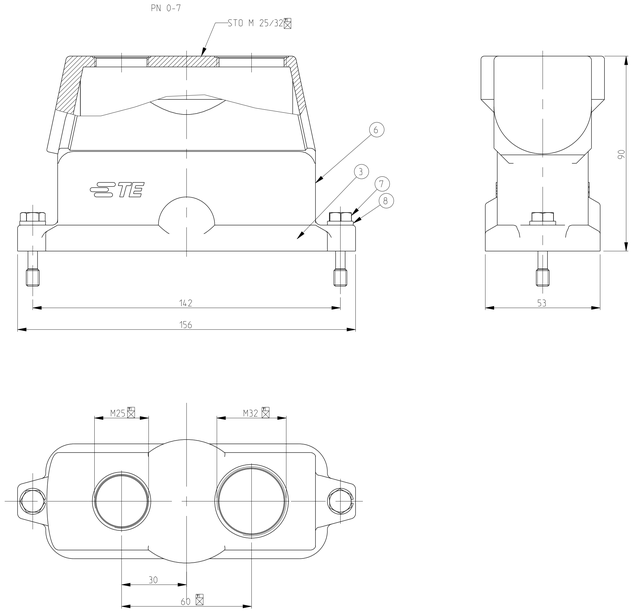

PN 0-1.0-4.0-5.0-6.1-3 & 1-6

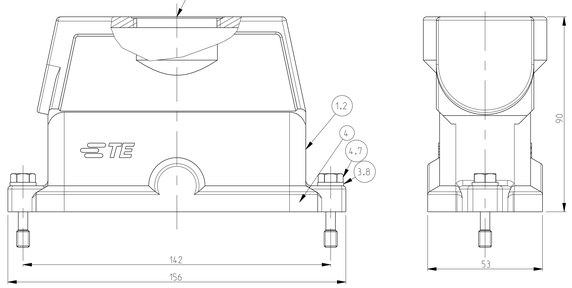

PN 1-5 & 1-7 (Neutral)

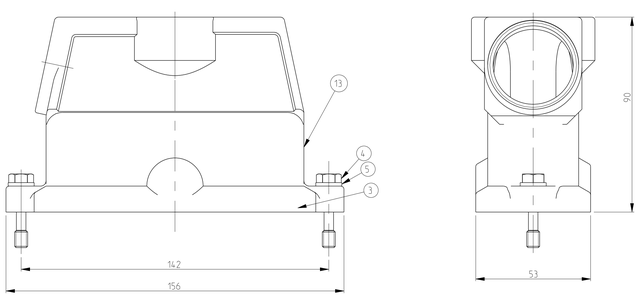

NOTES.

1. Material:Housing-Aluminium Diecasting Alloy
   Seals:Neoprene conductivity
2. Surface:Varnish grey
   -ChromitAL TCP passivation +Varnish Black
3. Packaging
   Quantity 5 Pieces in a box
4. Special Packaging
   Quantity 25 Pieces in a box
5. Varnish on the inside not necessarily

PN 0-1.0-4.0-5.0-6.1-3 & 1-6

SCALE 1:2

PN 1-2
With Weidmuller Logo

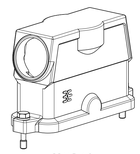

SCALE 1:2

PN 0-2.0-3.0-8 & 1-2

SCALE 1:2

PN 0-7

SCALE 1:2

PN 0-9.1-0.1-1.1-4.1-8 & 1-9

SCALE 1:2

PN 1-7.1-5 (Neutral)
Without logo

SCALE 1:2

1-9	1-8	1-7	1-6	1-5	1-4	1-3	1-2	1-1	1-0	0-9	0-8	0-7	0-6	0-5	0-4	0-3	0-2	0-1	DESCRIPTION	MATERIAL	SURFACE	COLOR	ITEM NO	REMARKS
OBSOLETE		OBSOLETE		OBSOLETE		OBSOLETE		OBSOLETE					OBSOLETE		OBSOLETE			OBSOLETE						
		1		1															Hood size 8 finished product	Aluminium	SUR TEC 650	Black RAL9005	13	
					1														Hood size 8 finished product	Aluminium		Without varnish	12	
								1											Blanking Piece	Brass	Nickel plated	Blue	11	
								1											O-Ring	Neoprene		Black	10	
	1							1											Hood size 8 finished product	Aluminium		White Aluminium	9	
			2						2	2	2	2							Washer, Plain	Stainless steel	Blank		8	B6.4
			2						2	2	2	2							Screw, Hexagon Bolt	Stainless steel	Blank		7	M6x30
												1							Hood size 8 finished product	Aluminium	SUR TEC 650	Black RAL9005	6	
2	2	2		2	2	2	2	2					2	2	2	2	2	2	Washer, Plain	Stainless steel	Blank		5	B6.4
2	2	2		2	2	2	2	2					2	2	2	2	2	2	Screw, Hexagon Bolt	Stainless steel	Blank		4	M6x30
1	1	1	1	1	1	1	1	1	1	1	1	1	1	1	1	1	1	1	Seal	Neoprene		Black	3	Conductivity
1			1			1	1			1	1	1			1	1			Hood size 8 finished product	Aluminium	SUR TEC 650	Black RAL9005	2	
									1				1				1	1	Hood size 8 finished product	Aluminium		Grey RAL7001	1	

DESCRIPTION	MATERIAL
~~EMV.24/64.STO.1.M40.G~~	1
EMV.24/64.STS.1.M40.G	1
EMV-K.24/64.STS.1.M40.G	1
EMV-K.24/64.STO.1.M40.G	1
~~EMV.24/64.STO.1.M20.G~~	1
~~EMV.24/64.STO.1.M25.G~~	1
EMV-K.24/64.STO.1.M25.G+1.M32.G	1
EMV-K.24/64.STS.1.M32.G	1
EMV-K.24/64.STO.1.M32.G+STS.1.M32.G	1
EMV.24/64.STO.1.M32.G+STS.1.M32.G	1
EMV.24/64.STO.1.M32.BS+STS.1.M32.G	1
~~EMV-K.24/64.STS.1.M40.G-WE~~	1
~~EMV-K.24/64.STO.1.M25.G~~	1
EMV.24/64.STO.1.M32.G+STS.1.M32.G	1
EMV-K.24/64.ST	1
~~EMV-K.24/64.STO.1.M32.G~~	1
~~EMV-K.24/64.STS.1.M40.G-Natural~~	1
EMV.24/64.STO.1.M32.G+STS.1.M32.G	1
EMV-K.24/64.STO.1.M32.G+STS.1.M32.G	1

THIS DRAWING IS A CONTROLLED DOCUMENT.

DIMENSIONS: mm

TOLERANCES UNLESS OTHERWISE SPECIFIED:
LINEAR
0 PLC ±0.4
1 PLC ±0.1
2 PLC ±0.2
3 PLC ±0.3
4 PLC ±0.4
ANGLES ±1°
FINISH -

MATERIAL -

DWN Schneider 01.08.2000
CHK C.Schweiger 01.08.2000
APVD -

PRODUCT SPEC -
APPLICATION SPEC -
WEIGHT 540 g

TE Connectivity

NAME
HOOD
EMV.24/64.STO/STS WITH M-THREAD

SIZE	CAGE CODE	DRAWING NO	RESTRICTED TO
A0	00779	C-1106461	

CUSTOMER DRAWING SCALE 5:1 SHEET 1 OF 1 REV A24

4806 (3/11)

Downloaded from Arrow.com.