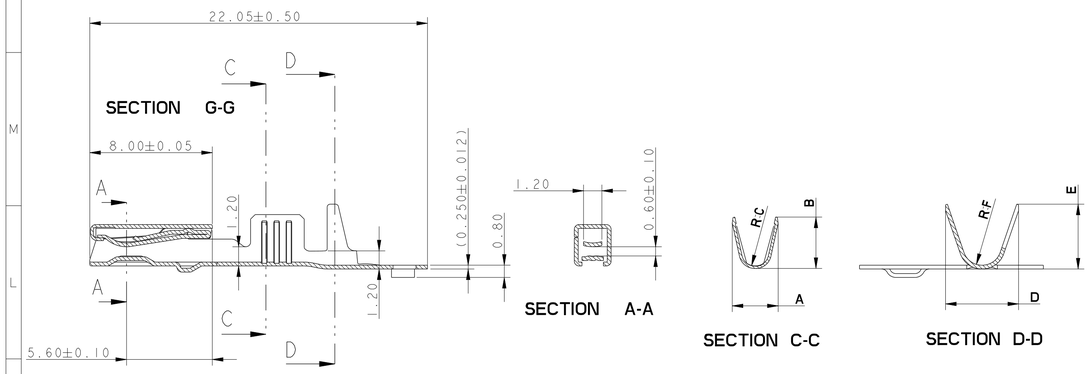

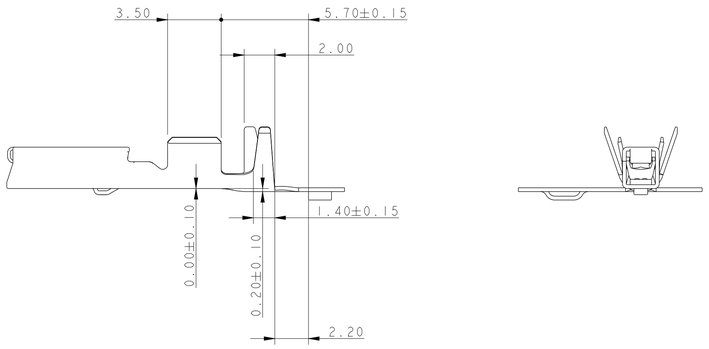

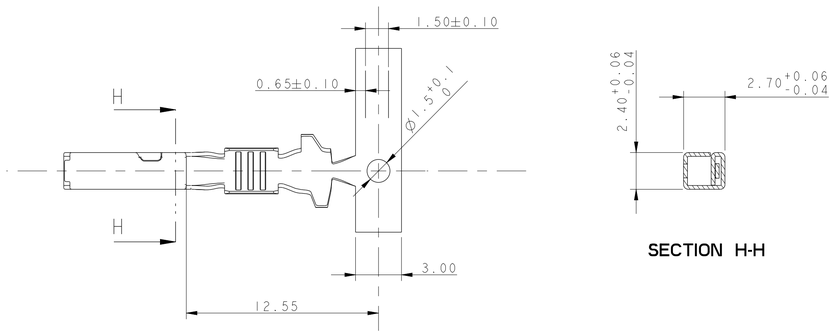

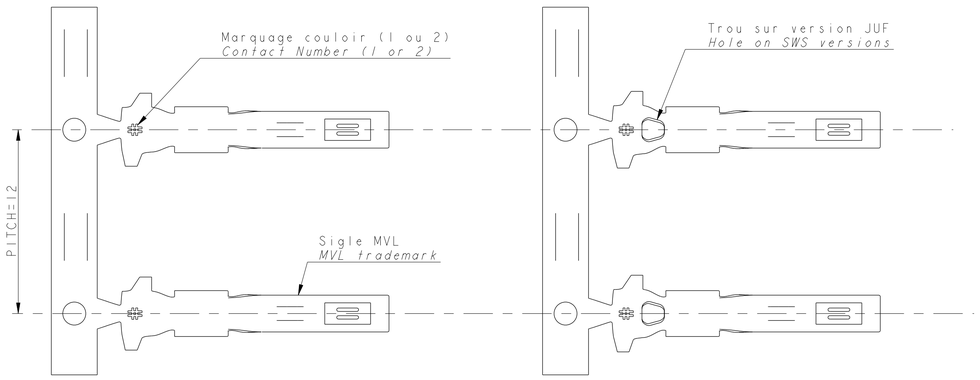

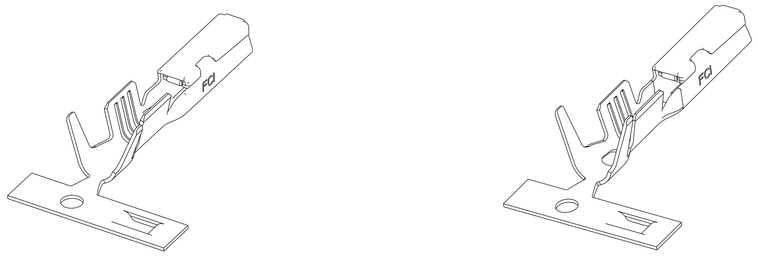

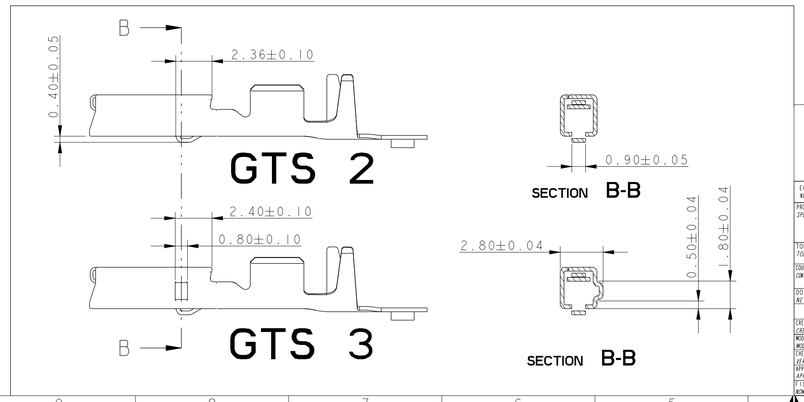

Etat / State			Références								Material	Classe
Pré-étamé / Pre-tinned	GTS 2 (K)	MVL P/N	F761110	PP10001580	PP10001482	F112300	PP10001483	F343100	PP10001484	F443100	Cu Ni Si	125°
		Revision	-	A	A	A	A	A	A	A		
		DELPHI P/N	33510897	13648599	13712871	13737770	13741954	13860784	13749482	13737773		
		Revision	01	01	01	01	01	01	01	01		
	GTS 3 (K)	MVL P/N	F196400	PP10000597	PP10000596	F243300	PP10000598	F543100	PP10000599	F643100		
		Revision	-	E	E	-	E	-	E	-		
		DELPHI P/N	33510898	33510899	33510901	33510902	33510904	33510906	33510908	33510910		
		Revision	01	01	01	01	01	01	01	01		
Pré-pisté 1.27µ Au / Pré-tracked Au 1.27µ	GTS 2 (K)	MVL P/N	NOT AVAILABLE	F861110	NOT AVAILABLE	F212300	F961110	F743100	F071110	F843100		150°
		Revision		A		-	A	A	A	A		
		DELPHI P/N	-	33510900	-	33510903	33510905	33510907	33510909	33510911		
		Revision		01		01	01	01	01	01		
	GTS 3 (K)	MVL P/N	NOT AVAILABLE	NOT AVAILABLE	NOT AVAILABLE	NOT AVAILABLE	NOT AVAILABLE	NOT AVAILABLE	NOT AVAILABLE	NOT AVAILABLE		
		Revision										
		DELPHI P/N	-	-	-	-	-	-	-	-		
		Revision										
Section / Gauge			0.22 to 0.35	0.5 to 0.85			1 to 1.3		1.4 to 2			
Ø Isolant pour non étanche / Ø Insulation for unsealed			1.15 to 1.50	1.4 to 1.9			1.75 to 2.2		2.1 to 2.8			
A			1.78	2.24			2.78		3.15			
B			2.24	2.36			2.95		3.30			
C			0.38	0.52			0.67		0.80			
D ± 0.3			2.53	3.08	5.00		4.00	5.00	5.00	5.20		
E			2.55	3.09	4.15		3.20	4.50	4.15	4.90		
F			0.65	0.82	1.25		1.00	1.35	1.25	1.35		
					Avec joint sur fil / With wire tube	Avec JUF / With SWS		Avec JUF / With SWS		Avec JUF / With SWS		

NOTE :

1 _ FOR CRIMP SPECIFICATION , SEE : FE CS 07 001

2 _ FOR PACKAGING , SEE : PU N°077

3_ ( ) NO TOLERANCED DIMENSIONS, GIVEN FOR INFORMATION

ECN-NO. / NUMERO ECN	POSITION / POSITION	CHANGE DESCRIPTION / MODIFICATION
-	-	-
-	-	-
-	-	-
-	-	-
-	-	DELPHI P/N ADDED

PRODUCT SPEC. / SPECIF. PRODUIT: -
PACKAGING SPEC. / SPECIF. EMBALAGE: -
APPLICATION SPEC. / SPECIF. APPLICATION: -

COPYRIGHT DELPHI CORPORATION AND/OR ITS AFFILIATES. ALL RIGHTS RESERVED. REVISED
THIS DRAWING IS THE PROPERTY OF DELPHI CORPORATION AND CONTAINS DELPHI CONFIDENTIAL INFORMATION. THE REPRODUCTION, DISTRIBUTION AND UTILIZATION OF THIS DOCUMENT OR ITS RELATED CAD MATH DATA, AS WELL AS COMMUNICATION OF ANY CONTENT TO OTHERS, WITHOUT EXPRESS AUTHORIZATION, IS PROHIBITED.
CE PLAN EST LA PROPRIETE DE DELPHI CORPORATION ET CONTIENT DES INFORMATIONS DELPHI CONFIDENTIELLES. LA REPRODUCTION, LA DISTRIBUTION ET L'UTILISATION DE CE DOCUMENT OU DE SES DONNEES MATHEMATIQUES CAO, AINSI QUE LA COMMUNICATION DE TOUT CONTENU A AUTRUI, SANS AUTORISATION EXPRESSE, EST INTERDITE.

TOLERANCES / TOLERANCES: ± 0.2 ± 2°
MATERIAL / MATIERE: SEE TABLE
SURFACE FINISH / ETAT DE SURFACE: -
COUNTERPART N° / CONTRE-PIECE N°: -
COLOUR / COULEUR: -
DO NOT MEASURE DRAWING / NE PAS PRENDRE DE COTES
TOOL NO. / OUTIL N°: 260 36 03
ECO Loc. Code / CODE B.E.: FE
TITLE / DESIGNATION: 15 x 0.8 FEMALE TERMINAL
PROJECT / PROJET: GTS

DELPHI
DELPHI PACKARD ELECTRICAL/ELECTRONIC ARCHITECTURE
EPERNON, FRANCE

ISO PROJECTION / PROJECTION ISO
DIMENSION IN MILLIMETERS / DIMENSIONS EN MILLIMETRES
CAD SYSTEM: pro / eng.
DWG SIZE / FORMAT: A1

	DATE / DATE	NAME / NOM
CREATED BY / CREE PAR		Stéphane HERNANDEZ
MODIFIED BY / MODIF. PAR	2013/07/15	F FAURIE
CHECKED BY / VERIF. PAR	2013/07/19	L DOMERGUE
APPROVED BY / APPR. PAR	2013/07/19	Patrice CAPPE

DRAWING NUMBER / REF. PLAN: 260FT0001 REV. / IND.: K
STATE / ETAT: SERIAL RELEASED
PART NUMBER / REF. ARTICLE: See Table REV. / IND.: -
ESR NO. / NUMERO ESR: FRA-2146
CAT. NO. / NUMERO CAT.: ----
DOCUMENT UNDER PDS CONTROL / DOCUMENT SOUS P.D.S.
NO MODIFICATION ALLOWED OUTSIDE / PAS DE MODIFICATION EN DEHORS
FILE NAME / NOM DE FICHIER: 260FT0001
SCALE / ECH.: 1:1
APPROVAL LEVEL / NIV. D'APPROBATION: -
SHEET / FEUILLE: 1 of / sur 1

EUR C04 112 F29

Downloaded from Arrow.com.