Data Sheet | Item Number: 2022-164

Start module for 1-conductor female connector; Push-in CAGE CLAMP®; 4 mm²; Pin spacing 5.2 mm; 1-pole; with integrated end plate; 4,00 mm²; blue

https://www.wago.com/2022-164

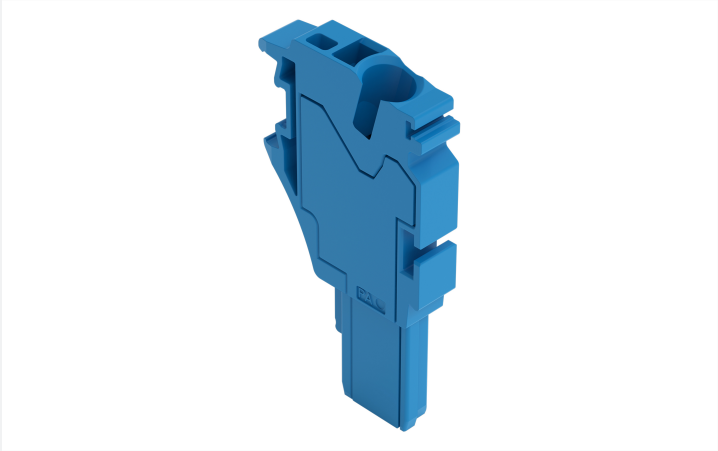

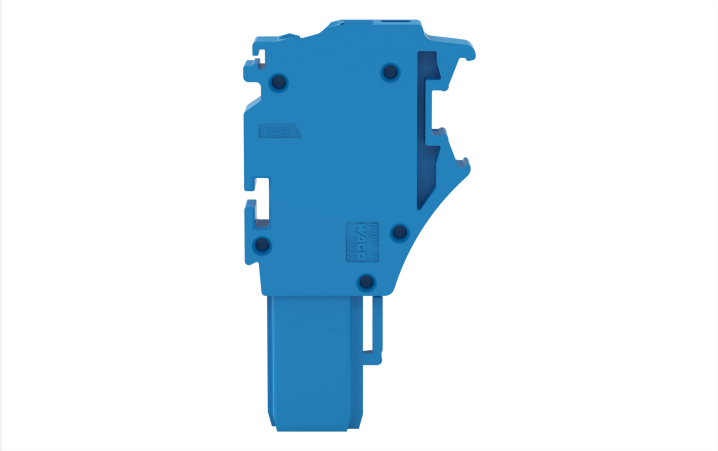

Color: blue

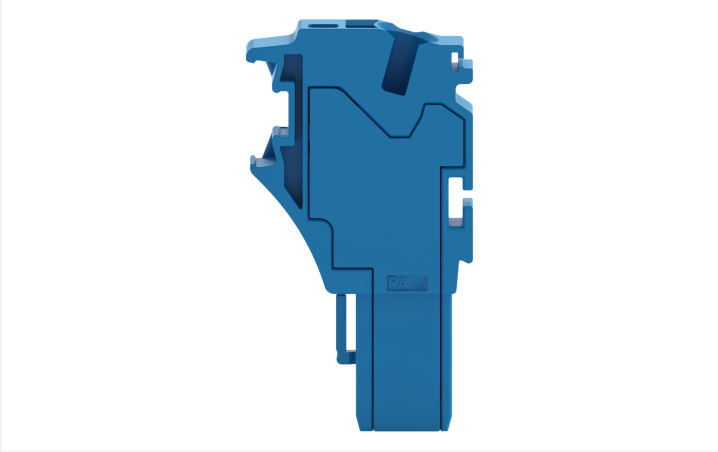

Female connector, 2022 Series, operating tool

Effortless electrical installations are guaranteed with this female connector (item number 2022-164). Ensure that the strip lengths are between 10 and 12 mm when connecting conductors to this female connector. Pluggable rail-mount terminal blocks are hugely popular in switchgear and control systems, for example, in railroad technology. They combine the best of rail-mount terminal blocks and connectors for the perfect solution. Variable wiring systems make pre-assembly easy, which leads to considerable time and cost savings in production, installation, operation, and maintenance. This product features conductor terminals and utilizes Push-in CAGE CLAMP®. Push-in CAGE CLAMP® technology provides a universal connection solution for any type of conductor. It allows both solid and fine-stranded conductors with ferrules to be inserted directly into the clamping point without the need for tools. The dimensions are (5.2 x 40.5 x 22.4) mm (width x height x depth). Depending on the type of conductor, this female connector is ideal for conductor cross sections ranging from 0.25 mm² to 4 mm².

An operating tool is used to operate this female connector/socket.

Downloaded from Arrow.com.

Notes

Safety Information	According to EN 61984, pluggable connectors without current interrupting capacity must not be mated or unmated when live or under load.

Electrical data

Ratings per	IEC/EN 61984		
Overvoltage category	III	III	II
Pollution degree	3	2	2
Nominal voltage	690 V	-	-
Rated impulse withstand voltage	6 kV	-	-
Rated current	24 A	-	-
Current at conductor cross-section (max.) mm²	32 A	-	-

Approvals per	UL 1059		
Use group	B	C	D
Rated voltage	600 V	600 V	-
Rated current	20 A	20 A	-

Approvals per	CSA 22.2 No 158		
Use group	B	C	D
Rated voltage	-	600 V	-
Rated current	-	20 A	-

General information	
Wiring direction	Front-entry wiring

Connection Data

Clamping units	1
Total number of potentials	1

Connection 1	
Connection technology	Push-in CAGE CLAMP®
Actuation type	Operating tool
Connectable conductor materials	Copper
Nominal cross-section	2.5 mm²
Solid conductor	0.25 … 4 mm² / 22 … 12 AWG
Solid conductor; push-in termination	0.75 … 4 mm² / 18 … 12 AWG
Fine-stranded conductor	0.25 … 4 mm² / 22 … 12 AWG
Fine-stranded conductor; with insulated ferrule	0.25 … 2.5 mm² / 22 … 14 AWG
Fine-stranded conductor; with ferrule; push-in termination	1 … 2.5 mm² / 18 … 14 AWG
Note (conductor cross-section)	Depending on the conductor characteristic, a conductor with a smaller cross-section can also be inserted via push-in termination.
Strip length	10 … 12 mm / 0.39 … 0.47 inches
Pole number	1
Wiring direction	Front-entry wiring

Physical data

Width	5.2 mm / 0.205 inches
Height	40.5 mm / 1.594 inches
Depth	22.4 mm / 0.882 inches

Downloaded from Arrow.com.

Mechanical data

Variable coding	Yes
Marking level	Side marking
Anti-rotation protection	Yes

Plug-in connection

Contact type (pluggable connector)	Female connector/socket
Connector (connection type)	for conductor
Mismating protection	No
Plugging without loss of pin spacing	Yes

Material data

Note (material data)	Information on material specifications can be found here
Color	blue
Material group	I
Insulation material (main housing)	Polyamide (PA66)
Flammability class per UL94	V0
Fire load	0.056 MJ
Weight	3.5 g

Environmental requirements

Processing temperature	-35 … +85 °C
Continuous operating temperature	-60 … +105 °C

Environmental Testing

Test specification: Railway applications – Rolling stock – Electronic equipment	DIN EN 50155 (VDE 0115-200):2022-06
Test procedure: Railway applications – Rolling stock equipment – Vibration and shock tests	DIN EN 61373 (VDE 0115-0106):2011-04
Spectrum/Mounting location	Service life test, Category 1, Class A/B
Functional test with noise-like oscillations	Test passed according to Section 8 of the standard
Frequency	f_1 = 5 Hz to f_2 = 150 Hz
Acceleration	0.101g (highest test level used for all axes)
Test duration per axis	10 min.
Test directions	X, Y and Z axes
Monitoring of contact faults and interruptions	Passed
Voltage drop measurement before and after each axis	Passed
Simulated service life test through increased levels of noise-like oscillations	Test passed according to Section 9 of the standard
Frequency	f_1 = 5 Hz to f_2 = 150 Hz
Acceleration	0.572g (highest test level used for all axes)
Test duration per axis	5 h
Test directions	X, Y and Z axes
Extended testing: Monitoring of contact faults and interruptions	Passed
Extended testing: Voltage drop measurement before and after each axis	Passed
Shock test	Test passed according to Section 10 of the standard
Shock pulse form	Half sine
Acceleration	5g (highest test level used for all axes)
Shock duration	30 ms
Number of shocks (per axis)	3 pos. und 3 neg.

Downloaded from Arrow.com.

Environmental Testing

Test directions	X, Y and Z axes
Extended testing: Monitoring of contact faults and interruptions	Passed
Extended testing: Voltage drop measurement before and after each axis	Passed
Vibration and shock stress for rolling stock equipment	Passed

Commercial data

Product Group	18 (X-COM-System)
PU (SPU)	250 pcs
Packaging type	Bag
Country of origin	CN
GTIN	4066966659894
Customs tariff number	85366990990

Product Classification

UNSPSC	39121409
eCl@ss 10.0	27-14-11-06
eCl@ss 9.0	27-14-11-06
ETIM 9.0	EC001284
ETIM 10.0	EC001284
ECCN	NO US CLASSIFICATION

Environmental Product Compliance

RoHS Compliance Status	Compliant,No Exemption

Approvals / Certificates

General approvals

Approval	Standard	Certificate Name
CSA CSA Group	C22.2 No. 158	2437422
KEMA/KEUR DEKRA Certification B.V.	EN 61984	71-101560
UL Underwriters Laboratories Inc.	UL 1059	E45172

Declarations of conformity and manufacturer's declarations

Approval	Standard	Certificate Name
EU-Declaration of Conformity WAGO GmbH & Co. KG	-	-
Railway WAGO GmbH & Co. KG	-	Z00004392.000
UK-Declaration of Conformity WAGO GmbH & Co. KG	-	-

Approvals for marine applications

Approval	Standard	Certificate Name
ABS American Bureau of Shipping	EN 60947	24-0152298-PDA
DNV GL Det Norske Veritas, Germanischer Lloyd	-	TAE00001V2

Approvals for marine applications

PRS Polski Rejestr Statków	-	TE/1094/880590/23

Downloaded from Arrow.com.

Downloads

Environmental Product Compliance

Compliance Search

Environmental Product Compliance 2022-164

Documentation

Bid Text

2022-164	19.02.2019	xml 4.30 KB
2022-164	14.05.2019	docx 16.06 KB

CAD/CAE-Data

CAD data

2D/3D Models 2022-164

CAE data

EPLAN Data Portal 2022-164

WSCAD Universe 2022-164

ZUKEN Portal 2022-164

1 Compatible Products

1.1 Optional Accessories

1.1.1 Ferrule

1.1.1.1 Ferrule

Item No.: 216-241
Ferrule; Sleeve for 0.5 mm² / 20 AWG; insulated; electro-tin plated; electrolytic copper; gastight crimped; acc. to DIN 46228, Part 4/09.90; white

Item No.: 216-242
Ferrule; Sleeve for 0.75 mm² / 18 AWG; insulated; electro-tin plated; electrolytic copper; gastight crimped; acc. to DIN 46228, Part 4/09.90; gray

Item No.: 216-262
Ferrule; Sleeve for 0.75 mm² / 18 AWG; insulated; electro-tin plated; electrolytic copper; gastight crimped; acc. to DIN 46228, Part 4/09.90; gray

Item No.: 216-243
Ferrule; Sleeve for 1 mm² / AWG 18; insulated; electro-tin plated; electrolytic copper; gastight crimped; acc. to DIN 46228, Part 4/09.90; red

Item No.: 216-263
Ferrule; Sleeve for 1 mm² / AWG 18; insulated; electro-tin plated; electrolytic copper; gastight crimped; acc. to DIN 46228, Part 4/09.90; red



Item No.: 216-244
Ferrule; Sleeve for 1.5 mm² / AWG 16; insulated; electro-tin plated; electrolytic copper; gastight crimped; acc. to DIN 46228, Part 4/09.90; black



Item No.: 216-264
Ferrule; Sleeve for 1.5 mm² / AWG 16; insulated; electro-tin plated; electrolytic copper; gastight crimped; acc. to DIN 46228, Part 4/09.90; black



Item No.: 216-246
Ferrule; Sleeve for 2.5 mm² / AWG 14; insulated; electro-tin plated; electrolytic copper; gastight crimped; acc. to DIN 46228, Part 4/09.90; blue



Item No.: 216-266
Ferrule; Sleeve for 2.5 mm² / AWG 14; insulated; electro-tin plated; electrolytic copper; gastight crimped; acc. to DIN 46228, Part 4/09.90; blue

Downloaded from Arrow.com.

1.1.2 Insulation stop

1.1.2.1 Insulation stop



Item No.: 2002-171
Insulation stop; 0.25 - 0.5 mm²; 5 pieces/ strip; light gray



Item No.: 2002-172
Insulation stop; 0.75 - 1 mm²; 5 pieces/strip; dark gray

1.1.3 Locking system

1.1.3.1 Locking system



Item No.: 2022-141
Locking lever; gray



Item No.: 2022-151
Locking lever; gray



Item No.: 2022-142
Locking lever; orange



Item No.: 2022-152
Locking lever; orange

1.1.4 Marking

1.1.4.1 Marker

Item No.: 793-5501
WMB marking card; as card; for terminal block width 5 - 17.5 mm; stretchable 5 - 5.2 mm; plain; snap-on type; white



Item No.: 2009-115
WMB-Inline; for Smart Printer; 1500 pieces on roll; stretchable 5 - 5.2 mm; plain; snap-on type; white

1.1.4.2 Marking strip



Item No.: 210-833
Marking strips; 25 m on roll; 6 mm wide; plain; Self-adhesive; white



Item No.: 2009-110
Marking strips; for Smart Printer; on reel; not stretchable; plain; snap-on type; white



Item No.: 210-831
Marking strips; on reel; 2.3 mm wide; plain; Self-adhesive; white



Item No.: 210-832
Marking strips; on reel; 3 mm wide; plain; Self-adhesive; white



Item No.: 210-834
Marking strips; on reel; 5 mm wide; plain; Self-adhesive; white

1.1.5 Protective warning marker

1.1.5.1 Cover



Item No.: 2002-115
Protective warning marker; for 5 terminal blocks; with high-voltage symbol, black; yellow

Downloaded from Arrow.com.

1.1.6 Strain relief

1.1.6.1 Strain relief plate



Item No.: 734-430
Strain relief plate; for female and male connectors; 1 part; gray

Item No.: 734-328
Strain relief plate; for female and male connectors; 12.5 mm wide; 1 part; gray

Item No.: 734-329
Strain relief plate; for female and male connectors; 25 mm wide; 1 part; gray

Item No.: 734-326
Strain relief plate; for female and male connectors; 35 mm wide; 1 part; gray

Item No.: 734-327
Strain relief plate; for female and male connectors; 6 mm wide; 1 part; gray



Item No.: 734-431
Strain relief plate; for female and male connectors; 75 mm wide; 1 part; gray

1.1.7 Tool

1.1.7.1 Operating tool



Item No.: 210-720
Operating tool; Blade: 3.5 x 0.5 mm; with a partially insulated shaft; multicoloured

Installation Notes

Coding

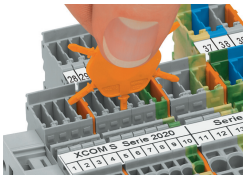

Insert coding pin into the corresponding slot and twist it off.



Coding a female plug: remove coding finger using a suitable tool.

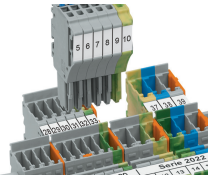

Insert coded female plug into X-COM®S-SYSTEM terminal block assembly.

Downloaded from Arrow.com.