Description

The DML1012ALDSQ is a single-channel load switch with very low on-resistance in a small package. It contains an n-channel MOSFET for up to V_{BIAS} – 1.5V input-voltage operation and 6A current channel with 3.2V to 5.5V bias supply. The load switch is controlled by a low-voltage control signal through ON pin.

Features and Benefits

- Low $R_{DS(ON)}$ – Ensures On-State Losses Are Minimized
- 0.8V to V_{BIAS} – 1.5V Input-Voltage Range
- 6A Continuous Current
- Low $R_{DS(ON)}$ Internal nFETs
  8mΩ at V_{BIAS} = 5V, V_{IN} = 1.05V, T_A = +85°C
- 28µA Low Quiescent Current
- 20µs Turn-On Rise Time
- 3.2V to 5.5V Bias Voltage
- Integrated Quick Output Discharge Resistor
- **Totally Lead-Free & Fully RoHS Compliant (Notes 1 & 2)**
- **Halogen and Antimony Free. "Green" Device (Note 3)**
- **The DML1012ALDSQ is suitable for automotive applications requiring specific change control; this part is AEC-Q101 qualified, PPAP capable, and manufactured in IATF 16949 certified facilities.**
  https://www.diodes.com/quality/product-definitions/

Applications

- Automotive/industrial electronics
- ADAS (advanced driver assistance systems)
- Infotainment

Mechanical Data

- Package: V-DFN3030-8
- Package Material: Molded Plastic, "Green" Molding Compound. UL Flammability Classification Rating 94V-0
- Moisture Sensitivity: Level 3 per J-STD-020
- Terminals: Finish — NiPdAu over Copper Leadframe. Solderable per MIL-STD-202, Method 208 e4
- Weight: 0.022 grams (Approximate)

V-DFN3030-8 (Type R)

Top View

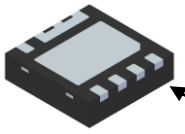

Bottom View

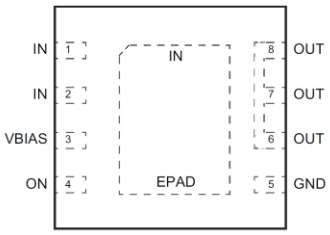

Top View

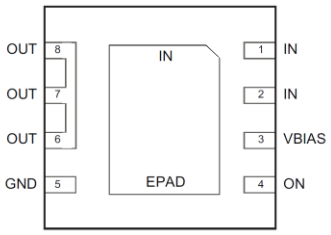

Bottom View

Ordering Information (Note 4)

Orderable Part Number	Package	Tape Width	Tape Pitch	Packing	
				Qty.	Carrier
DML1012ALDSQ-7A	V-DFN3030-8 (Type R)	12mm	8mm	1,500	Tape & Reel
DML1012ALDSQ-13	V-DFN3030-8 (Type R)	12mm	8mm	3,000	Tape & Reel

Notes:
1. No purposely added lead. Fully EU Directive 2002/95/EC (RoHS), 2011/65/EU (RoHS 2) & 2015/863/EU (RoHS 3) compliant.
2. See https://www.diodes.com/quality/lead-free/ for more information about Diodes Incorporated's definitions of Halogen- and Antimony-free, "Green" and Lead-free.
3. Halogen- and Antimony-free "Green" products are defined as those which contain <900ppm bromine, <900ppm chlorine (<1500ppm total Br + Cl) and <1000ppm antimony compounds.
4. For packaging details, go to our website at https://www.diodes.com/design/support/packaging/diodes-packaging/.

© 2026 Copyright Diodes Incorporated. All Rights Reserved.
Downloaded from Arrow.com.

Marking Information

Site 1

V-DFN3030-8 (Type R)

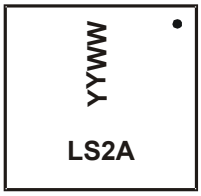

LS2A = Product Type Marking Code
YYWW = Date Code Marking
YY = Last Two Digits of Year (ex: 26 = 2026)
WW = Week Code (01 to 53)

Site 2

V-DFN3030-8 (Type R)

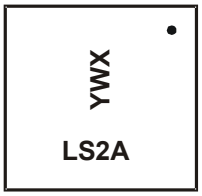

LS2A = Product Type Marking Code
YWX = Date Code Marking
Y = Year (ex: 6 = 2026)
W = Week (ex: a = Week 27; z Represents Week 52 and 53)
X = Internal Code (ex: U = Monday)

Date Code Key

Year	2025	2026	2027	2028	2029	2030	2031	2032	2033	2034	2035	2036
Code	5	6	7	8	9	0	1	2	3	4	5	6

Week	1-26	27-52	53
Code	A-Z	a-z	z

Internal Code	Sun	Mon	Tue	Wed	Thu	Fri	Sat
Code	T	U	V	W	X	Y	Z

Typical Application Circuit

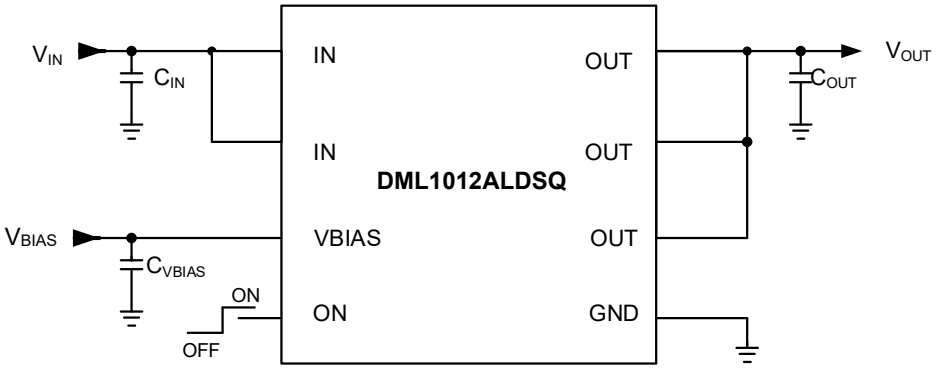

© 2026 Copyright Diodes Incorporated. All Rights Reserved.
Downloaded from Arrow.com.

Pin Description

Pin Number	Pin Name	Pin Function
1, 2, EPAD	IN	Load Switch Input. Bypass capacitor is recommended to minimize input-voltage dip.
3	VBIAS	Bias Voltage. Power-supply input for the device.
4	ON	Enable Input. Load switch is on when ON is pulled high. Load switch is off when ON is pulled low. Do not leave floating.
5	GND	Ground.
6, 7, 8	OUT	Load Switch Output.

Functional Block Diagram

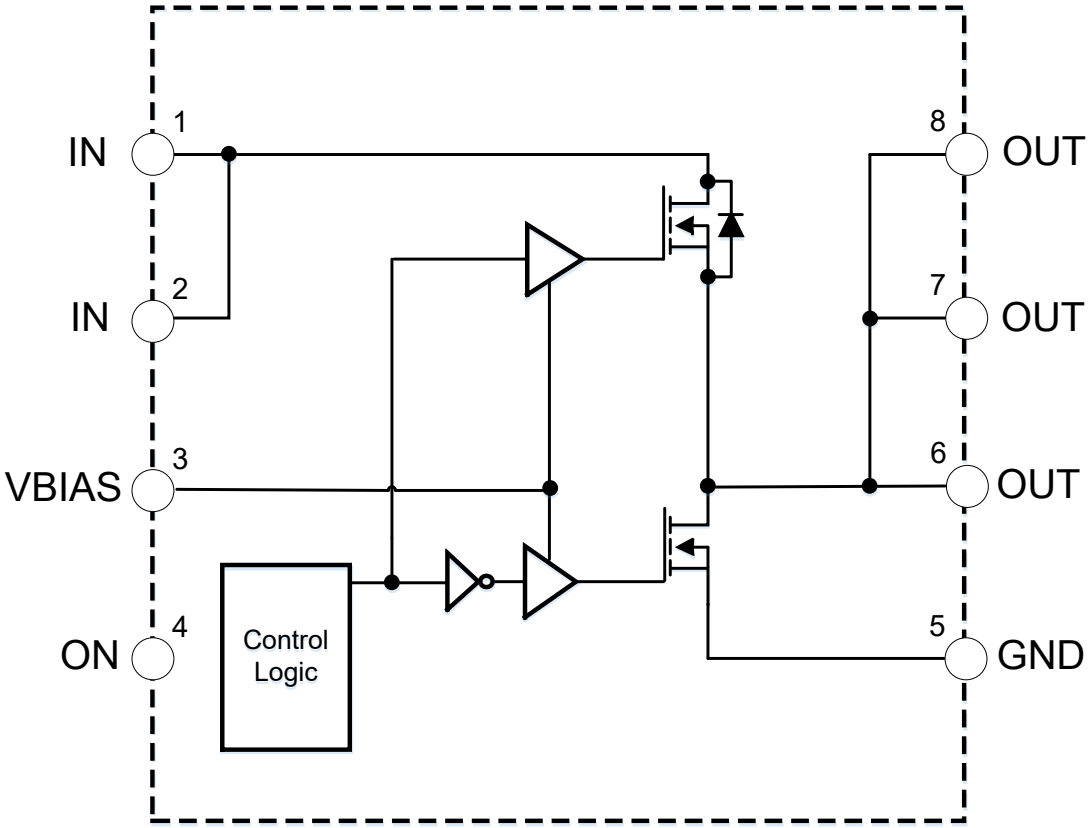

© 2026 Copyright Diodes Incorporated. All Rights Reserved.
Downloaded from Arrow.com.

Absolute Maximum Rating

Parameter	Rating
Voltage from IN, ON, VBIAS, OUT to GND Pin	-0.3V to 6V
Junction Temperature (T_J)	+150°C
I_{MAX}	12A
Storage Temperature (T_{STG})	-65°C to +150°C

Recommended Operating Ranges

Parameter	Rating
Supply Voltage (V_{BIAS})	3.2V to 5.5V
Input Voltage (V_{IN})	0.8V to V_{BIAS} - 1.5V
Ambient Temperature (T_A)	-40°C to +85°C
Package Thermal Resistance (θ_{JC})	8°C/W
Package Thermal Resistance (θ_{JA})	60°C/W

Electrical Characteristics (T_A = +25°C, V_{BIAS} = 5V, V_{IN} = 1.05V, unless otherwise specified.)

Symbol	Parameter	Conditions	Min	Typ	Max	Unit
V_{IN}	IN Supply Voltage	V_{ON} = 5V	0.8	1.05	V_{BIAS} - 1.5	V
V_{BIAS}	VBIAS Supply Voltage	—	3.2	5	5.5	V
I_D	Maximum Continuous Current	V_{ON} = 5V	—	6	—	A
I_{PLS}	Maximum Pulsed Switch Current	V_{IN} = V_{ON} = 5V Pulse < 300µs, 2% Duty Cycle	—	9	—	A
I_Q	Quiescent Supply Current of VBIAS	I_{OUT} = 0, V_{ON} = 5V	—	28	—	µA
I_{OFF}	VBIAS Shutdown Supply Current	V_{ON} = 0, V_{OUT} = 0	—	—	2	µA
I_{INOFF}	IN Shutdown Supply Current	V_{ON} = 0, V_{OUT} = 0	—	—	2	µA
I_{ON}	ON Leakage Current	V_{ON} = 5V	—	—	1	µA
V_{ONH}	ON High-Level Voltage	—	1.2	—	—	V
V_{ONL}	ON Low-Level Voltage	—	—	—	0.5	V
Switching ON Resistance						
R_{ON}	Switch ON-State Resistance	I_{OUT} = -200mA, V_{ON} = 5V, V_{BIAS} = 5V	—	—	8	mΩ
		I_{OUT} = -200mA, V_{ON} = 5V, V_{BIAS} = 3.3V	—	—	10	mΩ
R_{PD}	Output Pulldown Resistance	I_{OUT} = 15mA, V_{ON} = 0	—	—	200	Ω

Switching Electrical Characteristics (T_A = +25°C, V_{BIAS} = V_{ON} = 5V, C_{IN} = 1µF, C_{OUT} = 0.1µF, unless otherwise specified.)

Symbol	Parameter	Min	Typ	Max	Unit
V_{IN} = 1.5V, V_{BIAS} = V_{ON} = 5V					
t_{ON}	Turn-On Time	15	—	65	µs
t_{D-ON}	Turn-On Delay Time	—	20	—	
t_R	Turn-On Rise Time	—	25	—	
t_{OFF}	Turn-Off Time	—	0.2	—	
t_F	Turn-Off Fall Time	—	0.7	—	
V_{IN} = 1.05V, V_{BIAS} = V_{ON} = 5V					
t_{ON}	Turn-On Time	15	—	55	µs
t_{D-ON}	Turn-On Delay time	—	15	—	
t_R	Turn-On Rise Time	—	20	—	
t_{OFF}	Turn-Off Time	—	0.2	—	
t_F	Turn-Off Fall Time	—	0.7	—	

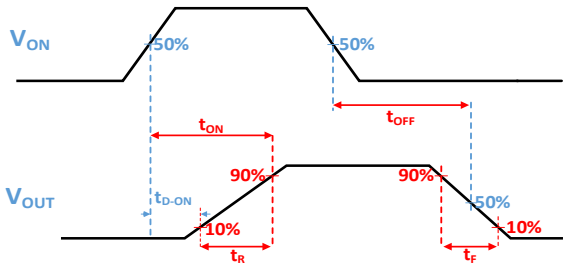

© 2026 Copyright Diodes Incorporated. All Rights Reserved.
Downloaded from Arrow.com.

Performance Characteristics (@T_A = +25°C, unless otherwise specified.)

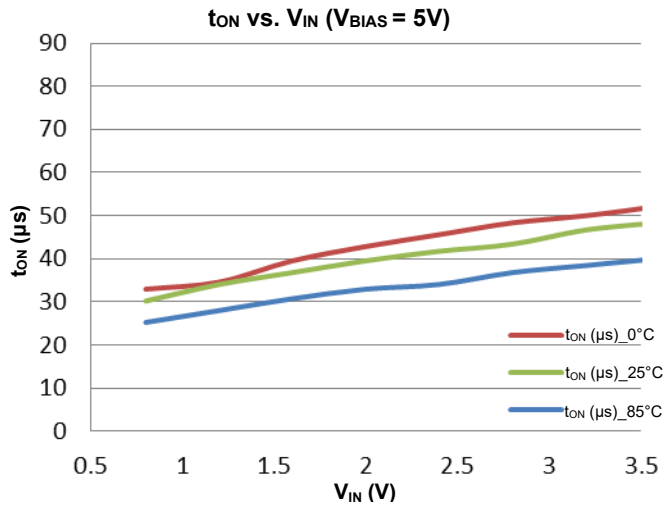

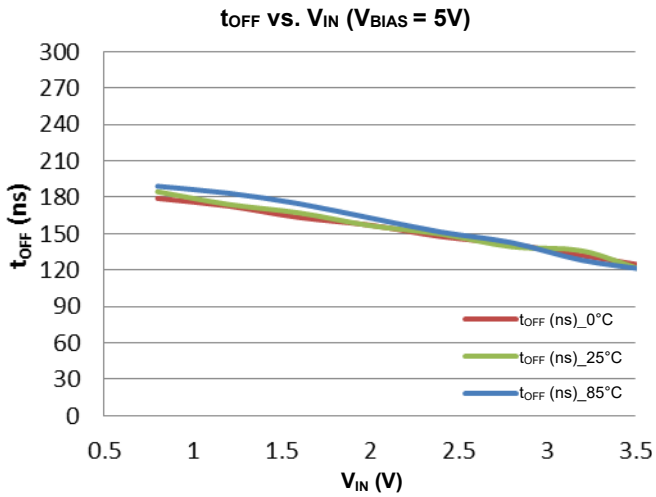

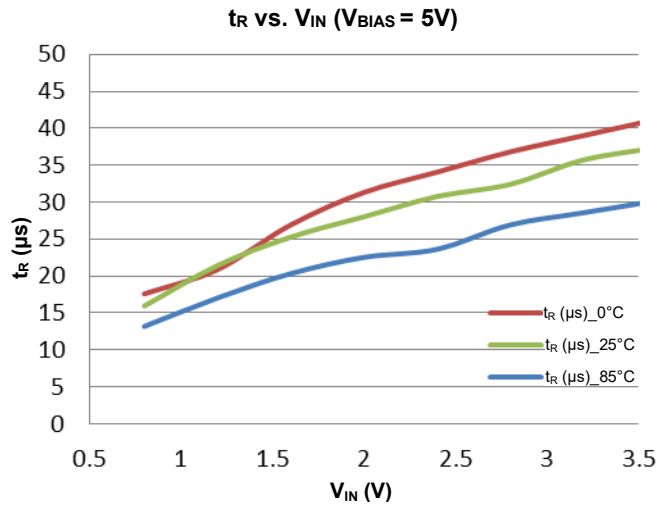

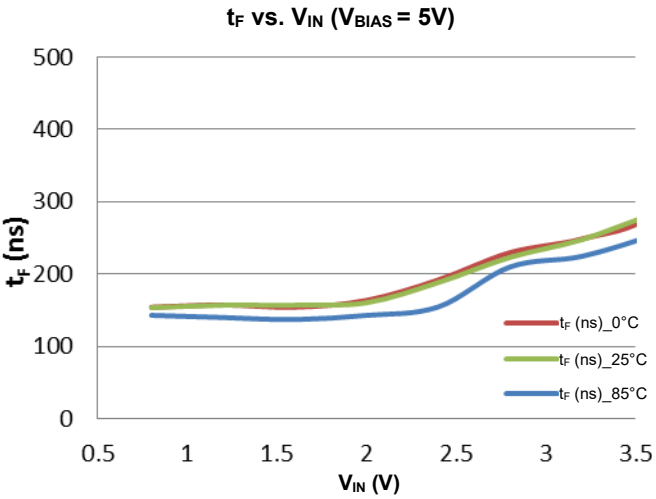

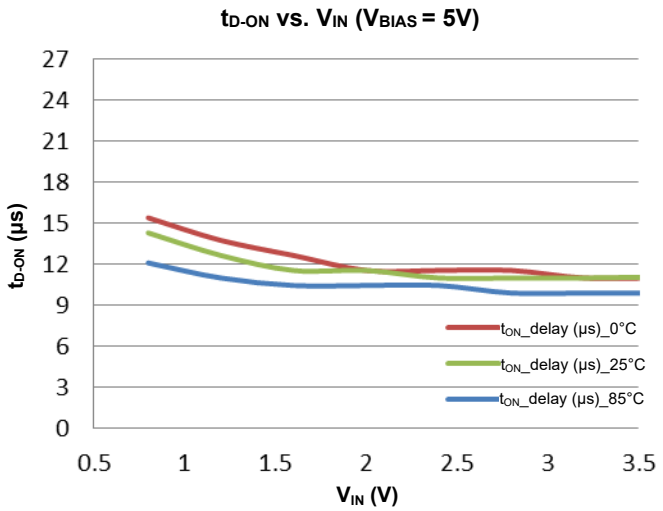

© 2026 Copyright Diodes Incorporated. All Rights Reserved.
Downloaded from Arrow.com.

Performance Characteristics (@T_A = +25°C, unless otherwise specified.) (continued)

Turn-On & Turn-On Rise Time

V_{IN} = 1.05V, V_{BIAS} = 5V, C_{IN} = 1μF, C_{OUT} = 0.1μF, R_{OUT} = 10Ω

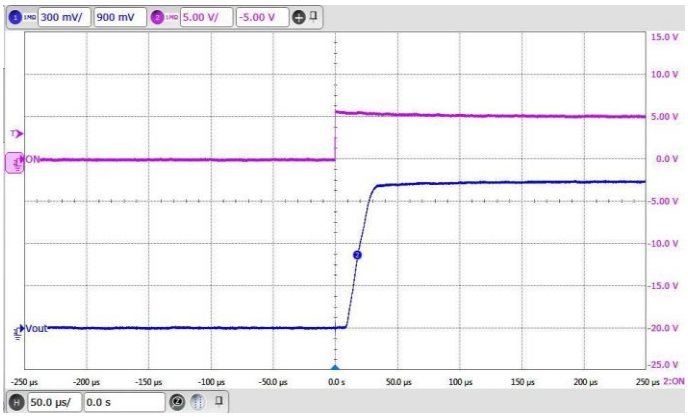

Turn-Off & Turn-Off Fall Time

V_{IN} = 1.05V, V_{BIAS} = 5V, C_{IN} = 1μF, C_{OUT} = 0.1μF, R_{OUT} = 10Ω

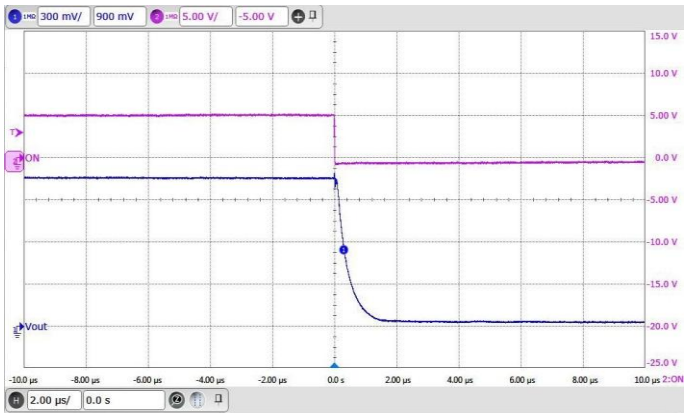

Turn-On & Turn-Off at I_{OUT} = -10A

V_{IN} = 1.05V, V_{BIAS} = 5V, C_{IN} = 1μF, C_{OUT} = 0.1μF, R_{OUT} = 0.1Ω

© 2026 Copyright Diodes Incorporated. All Rights Reserved.
Downloaded from Arrow.com.

Application Information

General Description

The DML1012ALDSQ is a single-channel, 6A load switch in an 8-pin V-DFN3030-8 (Type R) package. To reduce the voltage drop in high current rails, the device implements an ultra-low resistance n-channel MOSFET operated input-voltage range from 0.8V to 3.5V.

The device has very low leakage current during off-state. This prevents downstream circuits from pulling high standby current from the supply. Integrated control logic, driver, power supply and discharge FET eliminate the needs for any external components, which reduce solution size and bill of materials (BOM) count.

Enable Control

The DML1012ALDSQ device allows for enabling the MOSFET in an active-high configuration. When the VBIAS supply pin has an adequate voltage applied and the ON pin is at logic-high level, the MOSFET is enabled. Similarly, when the ON pin is at logic-low level, the MOSFET is disabled.

Power Sequencing

The DML1012ALDSQ device will function with fixed power sequence, and the performance of output turn-on delay may vary from what is specified. To achieve the specified performance, there are two recommended power sequences:

1.) $V_{BIAS} \rightarrow V_{IN} \rightarrow V_{ON}$
2.) $V_{IN} \rightarrow V_{BIAS} \rightarrow V_{ON}$

Input Capacitor

A capacitor of 10µF or higher value is recommended to be placed close to the IN pins of DML1012ALDSQ. This capacitor can reduce the voltage drop caused by the in-rush current during the turn-on transient of the load switch. A higher value capacitor can further reduce the voltage drop during high-current application.

Output Capacitor

A capacitor of 0.1µF or higher value is recommended to be placed between the OUT pins and GND pin. The switching time is affected by the capacitance. A larger capacitor makes the initial turn-on transient smoother. This capacitor must be large enough to supply a fast transient load in order to prevent the output from dropping.

V_{IN} and V_{BIAS} Voltage Range

For optimal on-resistance of load switch, make sure $V_{IN} \leq 1.5V + V_{BIAS}$ and V_{BIAS} is within the voltage range from 3.2V to 5.5V. On-resistance of load switch will be higher if $V_{IN} + 1.5V > V_{BIAS}$. Resistance curves of a typical sample device at different $V_{BIAS} = V_{IN}$ at I_{OUT} = -200mA are shown as below.

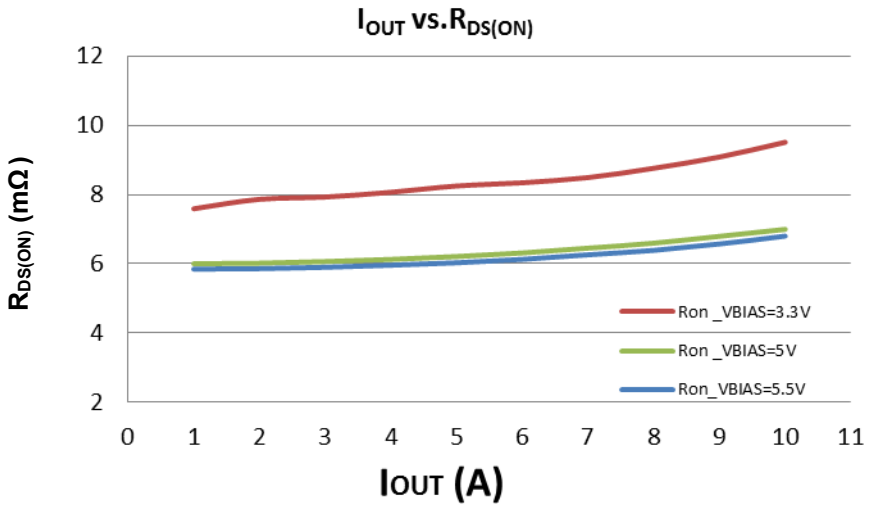

© 2026 Copyright Diodes Incorporated. All Rights Reserved.
Downloaded from Arrow.com.

Application Information (continued)

Thermal Considerations

To ensure proper operation, the maximum junction temperature of the DML1012ALDSQ should not exceed +150°C. Several factors attribute to the junction temperate rise: load current, MOSFET on-resistance, junction-to-ambient thermal resistance, and ambient temperature. The maximum load current can be determined by:

$$I_{LOAD(MAX)} = \sqrt{\frac{T_{J(MAX)} - T_C}{\Theta_{JC} \times R_{DS(ON)}}}$$

Where

$I_{LOAD(MAX)}$ is the maximum allowable current on load (A). (6A for DML1012ALDSQ)

$T_{J(MAX)}$ is the maximum allowable junction temperature.

T_C is the case temperature of the device.

θ_{JC} = junction to case thermal impedance. This parameter is highly dependent upon PCB layout.

PCB Layout Consideration

1. Place the input/output capacitors C_{IN} and C_{OUT} as close as possible to the IN and OUT pins.
2. The power traces, which are IN trace, OUT trace and GND trace, should be short, wide and directly for minimizing parasitic inductance.
3. Place C_{VBIAS} capacitor near the device pin.
4. Connect the signal ground to the GND pin and keep a single connection from GND pin to the power ground behind the input or output capacitors.
5. For better power dissipation, holes are recommended to connect to the exposed pad's landing area with a large copper polygon on the other side of the printed circuit board. The copper polygons and exposed pad shall connect to IN pin on the printed circuit board.

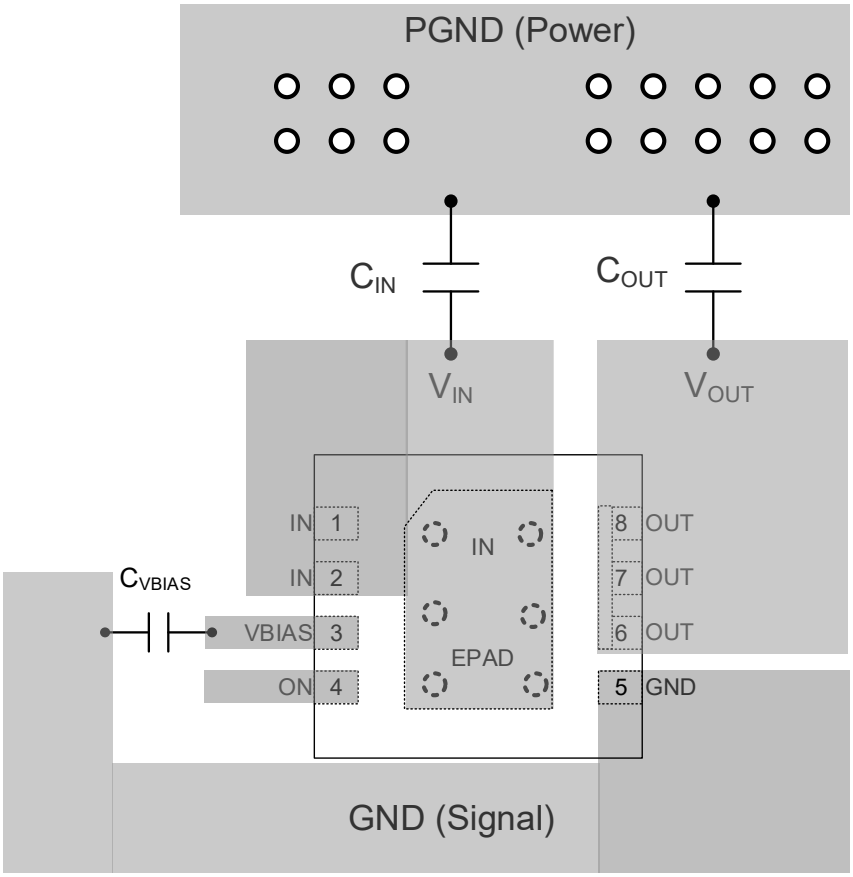

© 2026 Copyright Diodes Incorporated. All Rights Reserved.
Downloaded from Arrow.com.

Package Outline Dimensions

Please see http://www.diodes.com/package-outlines.html for the latest version.

V-DFN3030-8 (Type R)

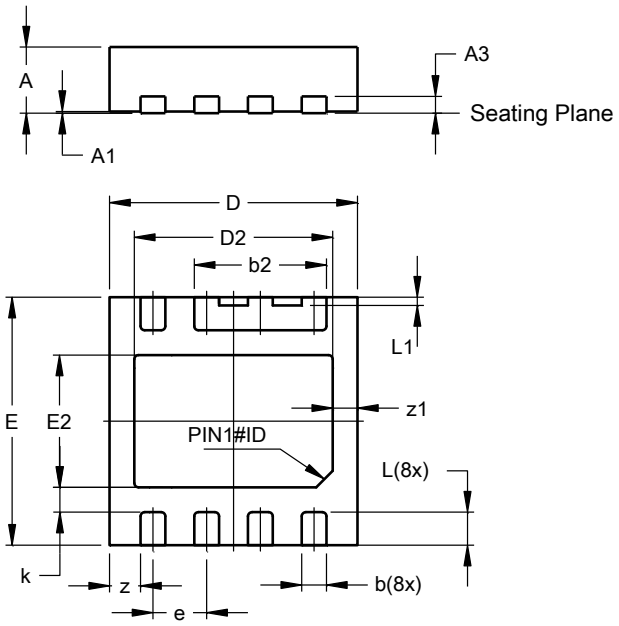

V-DFN3030-8 (Type R)			
Dim	**Min**	**Max**	**Typ**
A	0.77	0.83	0.80
A1	0.00	0.05	0.03
A3	--	--	0.203
b	0.25	0.35	0.30
b2	1.55	1.65	1.60
D	2.95	3.05	3.00
D2	2.30	2.50	2.40
E	2.95	3.05	3.00
E2	1.50	1.70	1.60
e	0.65 BSC		
k	--	--	0.30
L	0.35	0.45	0.40
L1	0.05	0.15	0.10
z	--	--	0.375
z1	--	--	0.30
All Dimensions in mm			

Suggested Pad Layout

Please see http://www.diodes.com/package-outlines.html for the latest version.

V-DFN3030-8 (Type R)

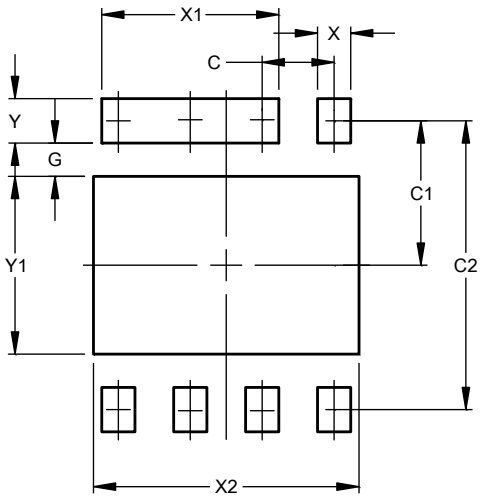

Dimensions	Value (in mm)
C	0.65
C1	1.30
C2	2.60
G	0.30
X	0.30
X1	1.60
X2	2.40
Y	0.40
Y1	1.60

© 2026 Copyright Diodes Incorporated. All Rights Reserved.
Downloaded from Arrow.com.

Surface-Mount Reel Specifications (All dimensions in mm.)

Please see https://www.diodes.com/assets/Packaging-Support-Docs/AP02007.pdf for the latest version.

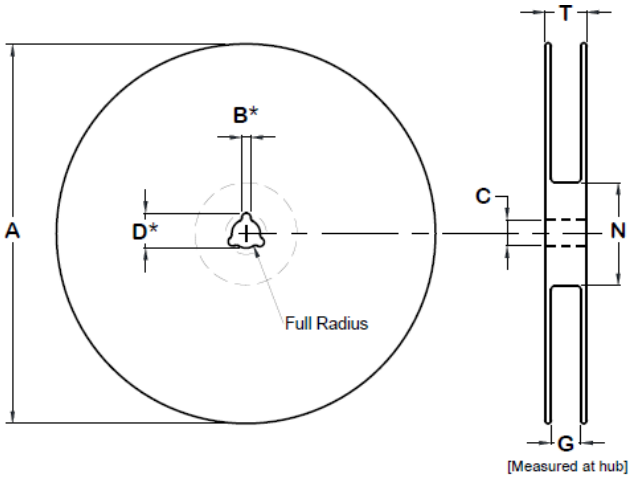

* Drive spokes optional. If used, dimensions with asterisks apply.

DML1012ALDSQ-7A

Tape Size	A Max	B* Max	C	D* Max	N Min	G	T Max
12mm	178 ±2	2.0 +0.5 -0	13 +0.5 -0.2	20.5 ±0.2	55 ±5	12.4 +2.0 -0.0	18.4

DML1012ALDSQ-13

Tape Size	A Max	B* Max	C	D* Max	N Min	G	T Max
12mm	330 ±2	2.0+0.5 -0	13 +0.5 -0.2	20.5 ±0.2	100 ±2	12.4 +2.0 -0.0	18.4

Embossed Carrier Tape Specifications

Please see https://www.diodes.com/assets/Packaging-Support-Docs/AP02007.pdf for the latest version.

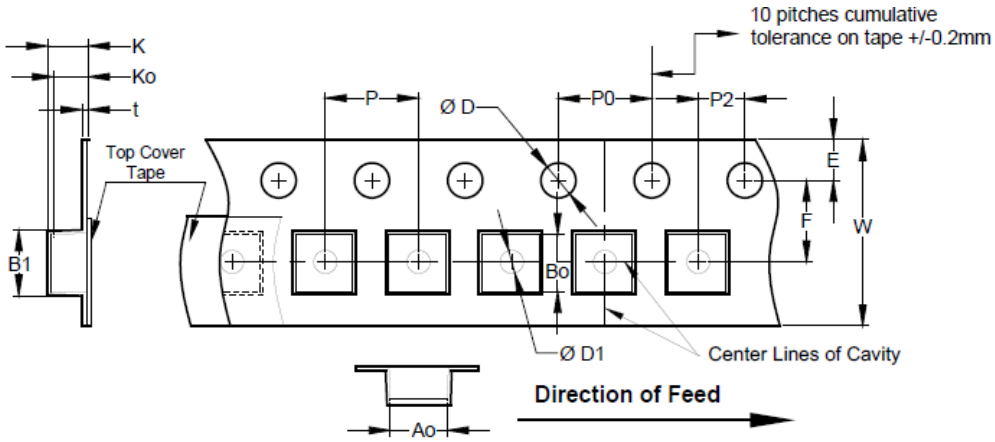

8, 12, 16, 24mm EMBOSSED TAPE DIMENSIONS IN mm						
Tape Width	D	E	P_o	tmax	A_o B_o K_o	
8, 12, 16, 24mm	1.50 +0.10 –0.0	1.75 ± 0.10	4.0 ± 0.10	0.400	(Note 5)	Constant Dimensions

Tape Width	B1 max	D1 min	F	K max	P2	W	P
12mm	8.2	1.5	5.5 ± 0.05	4.5	2.0 ± 0.05	12.0 ± 0.30	8.0 ± 0.10

Note: 5. Ao Bo Ko are determined by component size.

© 2026 Copyright Diodes Incorporated. All Rights Reserved.
Downloaded from Arrow.com.

Tape Orientation

Please see https://www.diodes.com/assets/Packaging-Support-Docs/AP02007.pdf for the latest version.

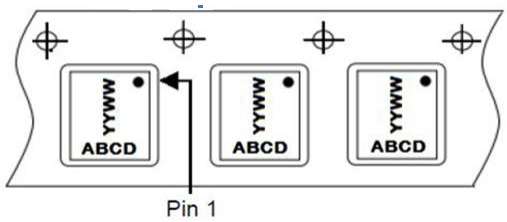

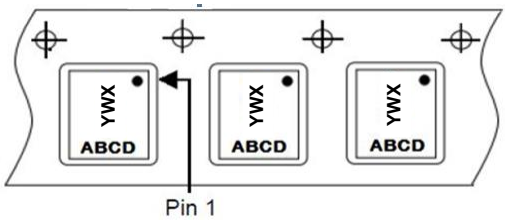

© 2026 Copyright Diodes Incorporated. All Rights Reserved.
Downloaded from Arrow.com.

IMPORTANT NOTICE

1. DIODES INCORPORATED (Diodes) AND ITS SUBSIDIARIES MAKE NO WARRANTY OF ANY KIND, EXPRESS OR IMPLIED, WITH REGARDS TO ANY INFORMATION CONTAINED IN THIS DOCUMENT, INCLUDING, BUT NOT LIMITED TO, THE IMPLIED WARRANTIES OF MERCHANTABILITY, FITNESS FOR A PARTICULAR PURPOSE OR NON-INFRINGEMENT OF THIRD PARTY INTELLECTUAL PROPERTY RIGHTS (AND THEIR EQUIVALENTS UNDER THE LAWS OF ANY JURISDICTION).

2. The Information contained herein is for informational purpose only and is provided only to illustrate the operation of Diodes' products described herein and application examples. Diodes does not assume any liability arising out of the application or use of this document or any product described herein. This document is intended for skilled and technically trained engineering customers and users who design with Diodes' products. Diodes' products may be used to facilitate safety-related applications; however, in all instances customers and users are responsible for (a) selecting the appropriate Diodes products for their applications, (b) evaluating the suitability of Diodes' products for their intended applications, (c) ensuring their applications, which incorporate Diodes' products, comply the applicable legal and regulatory requirements as well as safety and functional-safety related standards, and (d) ensuring they design with appropriate safeguards (including testing, validation, quality control techniques, redundancy, malfunction prevention, and appropriate treatment for aging degradation) to minimize the risks associated with their applications.

3. Diodes assumes no liability for any application-related information, support, assistance or feedback that may be provided by Diodes from time to time. Any customer or user of this document or products described herein will assume all risks and liabilities associated with such use, and will hold Diodes and all companies whose products are represented herein or on Diodes' websites, harmless against all damages and liabilities.

4. Products described herein may be covered by one or more United States, international or foreign patents and pending patent applications. Product names and markings noted herein may also be covered by one or more United States, international or foreign trademarks and trademark applications. Diodes does not convey any license under any of its intellectual property rights or the rights of any third parties (including third parties whose products and services may be described in this document or on Diodes' website) under this document.

5. Diodes' products are provided subject to Diodes' Standard Terms and Conditions of Sale (https://www.diodes.com/about/company/terms-and-conditions/terms-and-conditions-of-sales/) or other applicable terms. This document does not alter or expand the applicable warranties provided by Diodes. Diodes does not warrant or accept any liability whatsoever in respect of any products purchased through unauthorized sales channel.

6. Diodes' products and technology may not be used for or incorporated into any products or systems whose manufacture, use or sale is prohibited under any applicable laws and regulations. Should customers or users use Diodes' products in contravention of any applicable laws or regulations, or for any unintended or unauthorized application, customers and users will (a) be solely responsible for any damages, losses or penalties arising in connection therewith or as a result thereof, and (b) indemnify and hold Diodes and its representatives and agents harmless against any and all claims, damages, expenses, and attorney fees arising out of, directly or indirectly, any claim relating to any noncompliance with the applicable laws and regulations, as well as any unintended or unauthorized application.

7. While efforts have been made to ensure the information contained in this document is accurate, complete and current, it may contain technical inaccuracies, omissions and typographical errors. Diodes does not warrant that information contained in this document is error-free and Diodes is under no obligation to update or otherwise correct this information. Notwithstanding the foregoing, Diodes reserves the right to make modifications, enhancements, improvements, corrections or other changes without further notice to this document and any product described herein. This document is written in English but may be translated into multiple languages for reference. Only the English version of this document is the final and determinative format released by Diodes.

8. Any unauthorized copying, modification, distribution, transmission, display or other use of this document (or any portion hereof) is prohibited. Diodes assumes no responsibility for any losses incurred by the customers or users or any third parties arising from any such unauthorized use.

9. This Notice may be periodically updated with the most recent version available at https://www.diodes.com/about/company/terms-and-conditions/important-notice

The Diodes logo is a registered trademark of Diodes Incorporated in the United States and other countries.
All other trademarks are the property of their respective owners.
© 2026 Diodes Incorporated. All Rights Reserved.

www.diodes.com

© 2026 Copyright Diodes Incorporated. All Rights Reserved.
Downloaded from Arrow.com.