NOTES:

1. MATERIALS AND FINISHES:
   RP TNC STR BHD JACK IP 67 - BRASS, NICKEL PLATING

   MHF-1-LK RA PLUG:
   HOUSING - PBT, BLACK
   CONTACT AND GROUND CONTACT - PHOSPHOR BRONZE, SILVER PLATING

   CABLE - 1.13 MM CABLE

2. ELECTRICAL:
   A. IMPEDANCE: 50 OHM

3. PACKAGING:
   A. QUANTITY: SINGLE PACK
   B. MARKING: BAG TO BE MARKED
   "AMPHENOL RF, 95-850-313-XXX AND DATE CODE"

REVISIONS				
REV	DESCRIPTION	DATE	ECN	BY
A	RELEASE TO MFG.	27-JAN-23	16544	SG

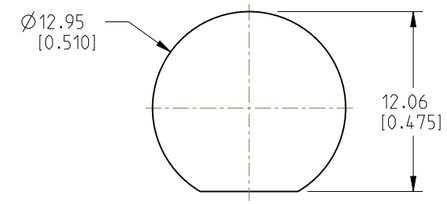

RECOMMENDED MOUNTING HOLE DIMENSIONS

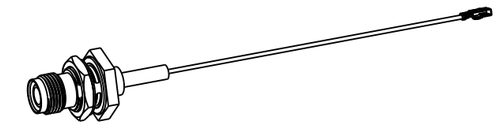

SCALE 0.600

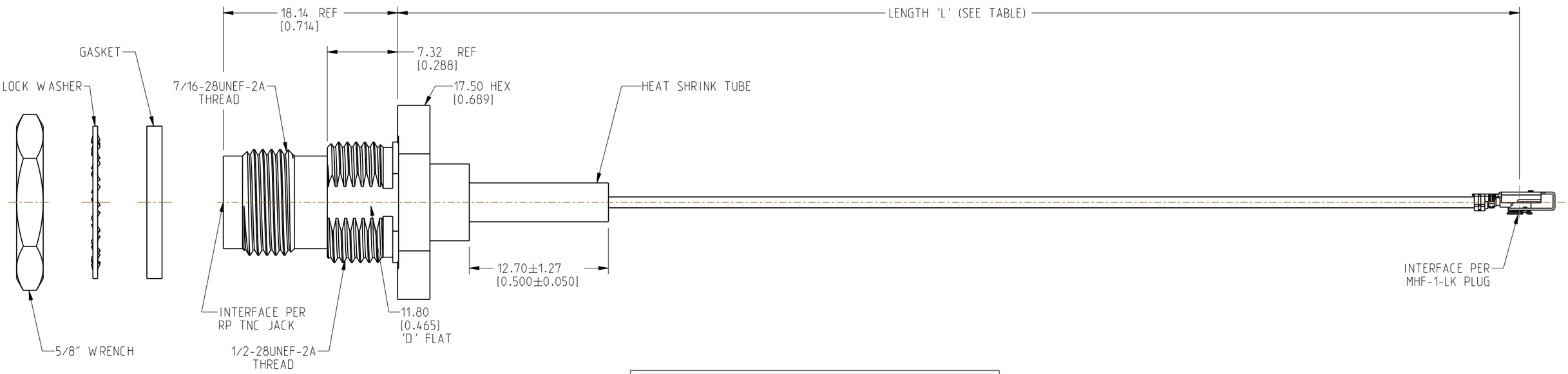

LENGTH TABLE	
PART NUMBER (METRIC)	LENGTH 'L' AND TOLERANCE IN MM (INCHES)
95-850-313-050	50.00 ± 3.81 [1.969 ± 0.150]
95-850-313-100	100.00 ± 3.81 [3.937 ± 0.150]
95-850-313-150	150.00 ± 3.81 [5.906 ± 0.150]
95-850-313-200	200.00 ± 5.08 [7.874 ± 0.200]
95-850-313-250	250.00 ± 5.08 [9.843 ± 0.200]
95-850-313-300	300.00 ± 5.08 [11.811 ± 0.200]

DESIGN REQUIREMENTS:

- [X] FREQUENCY: DC - 9 GHz
- [ ] VSWR: ____ MAX.
- [ ] INS. LOSS: ____ dB MAX.
- [X] CONTINUITY
- [X] HI-POT: 200 VRMS
- [ ] OTHER:

CUSTOMER OUTLINE DRAWING

ALL OTHER SHEETS ARE FOR INTERNAL USE ONLY

NOTICE: These drawings, specifications, or other data (1) are, and remain the property of Amphenol corp. (2) must be returned upon request; and (3) are confidential and not to be disclosed to any person other than those to whom they are given by Amphenol Corp. The furnishing of these drawings, specifications, or other data by Amphenol Corp., or to any other person to anyone for any purpose is not to be regarded by implication or otherwise in any manner licensing, granting rights to permitting such holder or any other person to manufacture, use or sell any product, process or design, patented or otherwise, that may in any way be related to or disclosed by said drawings, specifications, or other data.

THIRD ANGLE PROJ.

REFERENCE

EAR# 11650

UNLESS OTHERWISE SPECIFIED
DIMENSIONS ARE METRIC [INCHES] AND TOLERANCES ARE:

<0.5mm = ±0.05mm	[<0.020 = ±0.002]
0.5 - 6mm = ±0.1mm	[>0.020 - 0.236 = ±0.004]
>6.00 - 30mm = ±0.2mm	[>0.236 - 1.181 = ±0.008]
>30.00 - 120mm = ±0.3mm	[>1.181 - 4.725 = ±0.012]

ANGLES = ±1°

MATERIAL: SEE NOTES

ENGR.1: SIVA | ENGR.2: | DATE: 21-DEC-22

TITLE: RP TNC STR BHD JACK IP 67 TO MHF-1-LK RA PLUG USING 1.13 MM CABLE VARIOUS LENGTH

SHEET NO. 2 OF 2 | SCALE: 2.5:1.0

Amphenol RF

SIZE: B | DRAWING NO. 95-850-313-XXX | ITEM NO. 95-850-313-XXX | PART NO. 95-850-313-XXX | REV: A

Downloaded from Arrow.com.